PRELIMINARY AND FINAL SITE PLAN

FOR

CAPITOL SENIORS HOUSING
PROPOSED ASSISTED LIVING

BLOCK 2202, LOT 1; TAX MAP SHEET #7 - LATEST REV. DATED 03-80
620 PASCACK ROAD (CR 502)
TOWNSHIP OF WASHINGTON
BERGEN COUNTY, NEW JERSEY

200' PROPERTY OWNERS LIST

PROPERTY OWNER	BLOCK	LOT
TJ REALTY, LLC 644 PASCACK RD WASHINGTON, NJ 07676	2202	2
TJG, INC. T/A SEASON CAFÉ & REST. 644 PASCACK RD WASHINGTON, NJ 07676	2202	3
MIRAGLIA, ROGER 731 WASHINGTON AVE WASHINGTON, NJ 07676	2202	4 & 5
660 PASCACK REALTY LLC 546 RIVER DRIVE GARFIELD, NJ 07026	2202	6, 7 & 8
FRERE, LUIS G. 769 WASHINGTON AVE WASHINGTON TWP, NJ 07676	2202	9
LANSKI, CHRISTOPHER ETAL 777 WASHINGTON AVE WASHINGTON TWP, NJ 07676	2202	10
SPEZIAL, SCOTT 785 WASHINGTON AVE WASHINGTON TWP, NJ 07676	2202	11
590 PASCACK REALTY LLC 546 RIVER ROAD GARFIELD, NJ 07026	2202	12
CASSETTA (ETALS), CAROL 704 AMHERST DR WASHINGTON TWP, NJ 07676	2202.02	1
SANTAITE, DOMINIC & DANA 708 AMHERST DR WASHINGTON TWP, NJ 07676	2202.02	2
PALATTY, JASON & JULI 709 TULANE COURT WASHINGTON TWP, NJ 07676	2202.02	3
AHRENS, JAMIE R & KURT F 713 TULANE COURT WASHINGTON TWP, NJ 07676	2202.02	4
ORSTELLI, VINCENT & MARIE 710 TULANE CT WASHINGTON TWP, NJ 07676	2202.02	5
ZOCCO, ANGELO & SUZANNE 706 TULANE CT WASHINGTON TWP, NJ 07676	2202.02	6
MESSINA, FELIX & IRENE 726 AMHERST DRIVE WASHINGTON TWP, NJ 07676	2202.02	8
GRINKOVITCH, JEFFREY & BLANCA 730 AMHERST DR WASHINGTON TWP, NJ 07676	2202.02	9
SCOTTO, VALNTINO & MARTA 805 ROBINWOOD RD WASHINGTON TWP, NJ 07676	2203	2.01
DENTON, JUDY 815 ROBBINWOOD RD WASHINGTON TWP, NJ 07676	2203	4.01
SUFFIN, ALFRED & SHELLY 204 YORKTOWNE COURT WASHINGTON TWP, NJ 07676	3201	2
STARR, BETTY 205 YORKTOWNE CT WASHINGTON TWP, NJ 07676	3201	2
WEISS, RICHARD 206 YORKTOWNE CT WASHINGTON TWP, NJ 07676	3201	2
DEL GRECO, JOAN & SIMS, JEFFREY 211 YORKTOWNE CT WASHINGTON TWP, NJ 07676	3201	2
FUNG, SIU LIN & KWONG, CHUI CHOW 212 YORKTOWNE COURT WASHINGTON TWP, NJ 07676	3201	2
KORENDA, GLEN 16 OVERLOOK DR RIVERDALE, NJ 07457	3201	3

ALSO TO BE NOTIFIED

WASHINGTON COMMONS CONDO ASSOCIATION
MR. GARY WILKIN
173 WINCHESTER COURT
WASHINGTON TWP, NJ 07676

SUEZ WATER
200 LAKE SHORE DR
HAWORTH, NJ 07647

NJ HIGHWAY AUTHORITY PARKWAY
KING GEORGE'S ROAD
WOODBRIDGE, NJ 07095

CABLEVISION
40 POTASH ROAD
OAKLAND, NJ 07436-1831

VERIZON
PO BOX 4833
TRENTON, NJ 08650

PUBLIC SERVICE ELECTRIC AND GAS
214 HUDSON STREET
HACKENSACK, NJ 07602

PUBLIC SERVICE ELECTRIC AND GAS
750 WALNUT ST
CRANFORD, NJ 07016

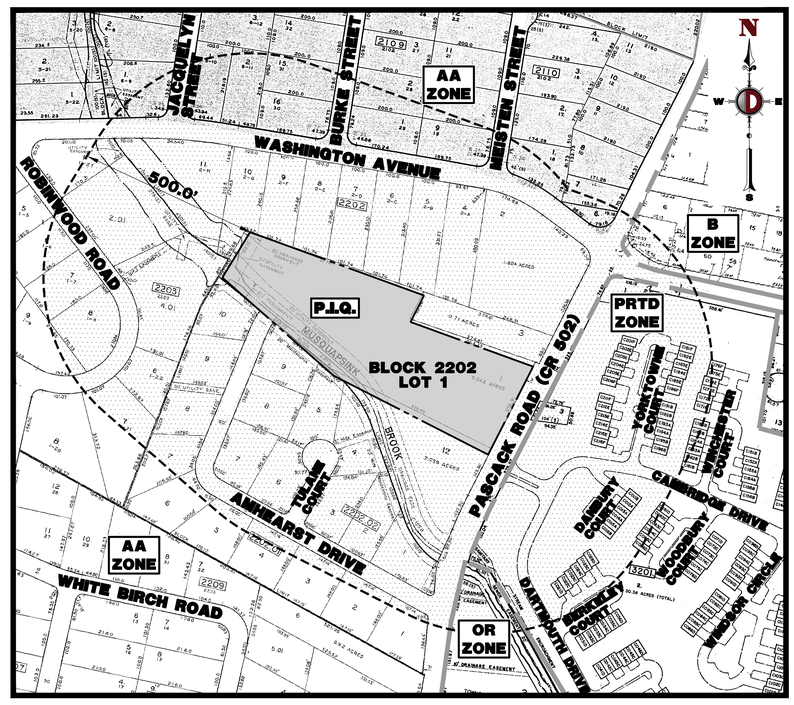

AREA MAP
1" = 200'

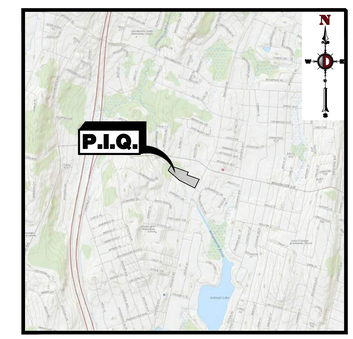

KEY MAP
1" = 2000'

DRAWING INDEX

COVER SHEET	1 of 21
AERIAL MAP	2 of 21
DEMOLITION PLAN	3 of 21
OVERALL SITE PLAN	4 of 21
SITE PLAN	5 of 21
GRADING PLAN	6 of 21
DRAINAGE & UTILITY PLAN	7 of 21
LIGHTING PLAN	11 of 21
SOIL EROSION & SEDIMENT CONTROL PLAN	12 of 21
SOIL EROSION & SEDIMENT CONTROL DETAILS	13 of 21
CONSTRUCTION DETAILS	14 – 17 of 21
VEHICAL CIRCULATION PLAN – FIRE	18 of 21
VEHICAL CIRCULATION PLAN – REFUSE	19 of 21
VEHICAL CIRCULATION PLAN – DELIVERY	20 of 21
ADA RAMP EXHIBIT	21 of 21

ZONING BOARD OF ADJUSTMENT APPROVAL

APPROVED AT THE ZONING BOARD OF ADJUSTMENT OF THE TOWNSHIP OF WASHINGTON, BERGEN COUNTY, NJ

CHAIRMAN DATE

SECRETARY DATE

BOARD ENGINEER DATE

OWNER CERTIFICATION

I CERTIFY THAT I AM THE OWNER OF LOT 1 BLOCK 2202 AND CONSENT TO THE FILING OF THIS APPLICATION.

PROPERTY OWNER DATE

PREPARED BY
DYNAMIC ENGINEERING CONSULTANTS, P.C.
245 MAIN STREET - SUITE 110
CHESTER, NJ 07930
WWW.DYNAMICEC.COM

Rev.	Date	Comments	By
1	03/20/20	REVISED PER COMPLETENESS COMMENTS	JTG

THIS PLAN SET IS FOR PERMITTING PURPOSES ONLY AND MAY NOT BE USED FOR CONSTRUCTION

DYNAMIC ENGINEERING
LAND DEVELOPMENT CONSULTING • PERMITTING • GEOTECHNICAL • ENVIRONMENTAL • SURVEY • PLANNING & ZONING
245 Main Street - Suite 110
Chester, NJ 07930
T: 908.879.9229
F: 908.879.0222
www.dynamicec.com
Offices conveniently located in:
Lake Como, New Jersey T: 732.974.0198 | Chester, New Jersey T: 908.879.9229 | Newark, New Jersey T: 973.755.7200 | Toms River, New Jersey T: 732.974.0198
Allen, Texas T: 972.534.2100 | Austin, Texas T:512.646.2646 | Houston, Texas T: 281.789.6400
Newtown, Pennsylvania T: 267.685.0276 | Delray Beach, Florida T: 561.921.8570

TITLE: COVER SHEET

PROJECT: **CAPITOL SENIORS HOUSING**
PROPOSED ASSISTED LIVING
BLOCK 2202, LOT 1
620 PASCACK ROAD (CR 502)
TOWNSHIP OT WASHINGTON, BERGEN COUNTY, NEW JERSEY

JOB No: 1423-99-003
DATE: 01/10/2020
DRAWN BY: CMT/JTG
SCALE: (H) AS (V) SHOWN
DESIGNED BY: MLR
CHECKED BY: DTS
CHECKED BY: _
SHEET No: 1 OF 21

JOSEPH G. JAWORSKI
PROFESSIONAL ENGINEER
NEW JERSEY LICENSE No. 36618

DANIEL T. SEHNAL
PROFESSIONAL ENGINEER
NEW JERSEY LICENSE No. 53572

811 Know what's below. Call before you dig.
PROTECT YOURSELF
ALL STATES REQUIRE NOTIFICATION OF EXCAVATORS, OWNERS, OR ANY PERSON PERFORMING SITE WORK WITHIN THE SURFACE ANYWHERE IN ANY STATE
FOR STATE SPECIFIC DIRECT PHONE NUMBERS VISIT: WWW.CALL811.COM

Rev. # 1

Plotted: 03/25/20 – 1:40 PM, By: jpeoliner, – Product Ver: 23.1s (LMS Tech)
File: P:\DECPC PROJECTS\1423 Capitol Seniors Housing\99-003 Washington\Dwg\Site Plans\D142399003SK1.dwg, ---> 01 COVER SHEET

COPYRIGHT © 2020 – DYNAMIC ENGINEERING CONSULTANTS, PC – ALL RIGHTS RESERVED

GRAPHIC SCALE

-80 0 40 80 160 320

(IN FEET)
1 INCH = 80 FT.

THE AERIAL IMAGE DEPICTED ON THIS PLAN IS BASED ON IMAGERY PREPARED BY DIGITAL GLOBE, GEO EYE AND USDA FARM SERVICE AGENCY. THIS IMAGERY WAS PROVIDED BY GOOGLE MAPS ON 10/14/19. THE CONDITIONS OF THE SITE AND SURROUNDING AREAS MAY HAVE CHANGED SINCE THE DATE OF AERIAL PHOTOGRAPHY AND THEREFORE THIS PLAN MAY NOT ACCURATELY REFLECT ALL CURRENT EXISTING CONDITIONS.

THIS PLAN SET IS FOR PERMITTING PURPOSES ONLY AND MAY NOT BE USED FOR CONSTRUCTION

Rev.	Date	Comments	By
1	03/20/20	REVISED PER COMPLETENESS COMMENTS	JTG

DYNAMIC ENGINEERING
LAND DEVELOPMENT CONSULTING • PERMITTING • GEOTECHNICAL • ENVIRONMENTAL • SURVEY • PLANNING & ZONING
Offices conveniently located in:
Lake Como, New Jersey T: 732.974.0198 | Chester, New Jersey T: 908.879.9229 | Newark, New Jersey T: 973.755.7200 | Toms River, New Jersey T: 732.974.0198
Allen, Texas T: 972.534.2100 | Austin, Texas T:512.446.2646 | Houston, Texas T: 281.789.6400
Newtown, Pennsylvania T: 267.685.0276 | Delray Beach, Florida T: 561.921.8570
245 Main Street - Suite 110
Chester, NJ 07930
T: 908.879.9229
F: 908.879.0222
www.dynamicec.com

TITLE:

AERIAL MAP

PROJECT: **CAPITOL SENIORS HOUSING**
PROPOSED ASSISTED LIVING
BLOCK 2202, LOT 1
620 PASCACK ROAD (CR 502)
TOWNSHIP OT WASHINGTON, BERGEN COUNTY, NEW JERSEY

JOB No: 1423-99-003	DATE: 01/10/2020
DRAWN BY: CMT/JTG	SCALE: (H) 1"=60' (V)
DESIGNED BY: MLR	SHEET No: 2 OF 21
CHECKED BY: DTS	
CHECKED BY: _	Rev. # 1

JOSEPH G. JAWORSKI
PROFESSIONAL ENGINEER
NEW JERSEY LICENSE No. 36618

DANIEL T. SEHNAL
PROFESSIONAL ENGINEER
NEW JERSEY LICENSE No. 53572

811 PROTECT YOURSELF
ALL STATES REQUIRE NOTIFICATION OF EXCAVATORS, DESIGNERS, OR ANY PERSON PREPARING TO DISTURB THE EARTH'S SURFACE ANYWHERE IN ANY STATE
Know what's below. Call before you dig.
FOR STATE SPECIFIC DIRECT PHONE NUMBERS VISIT: WWW.CALL811.COM

Plotted: 03/25/20 – 1:41 PM, By: jpelliner, – Product Ver: 23.1s (LMS Tech)
File: P:\DEDPC PROJECTS\1423 Capitol Seniors Housing\99-003 Washington\Dwg\Site Plans\D1423990035A1.dwg, ---> 02 AERIAL MAP

COPYRIGHT © 2020 – DYNAMIC ENGINEERING CONSULTANTS, PC – ALL RIGHTS RESERVED

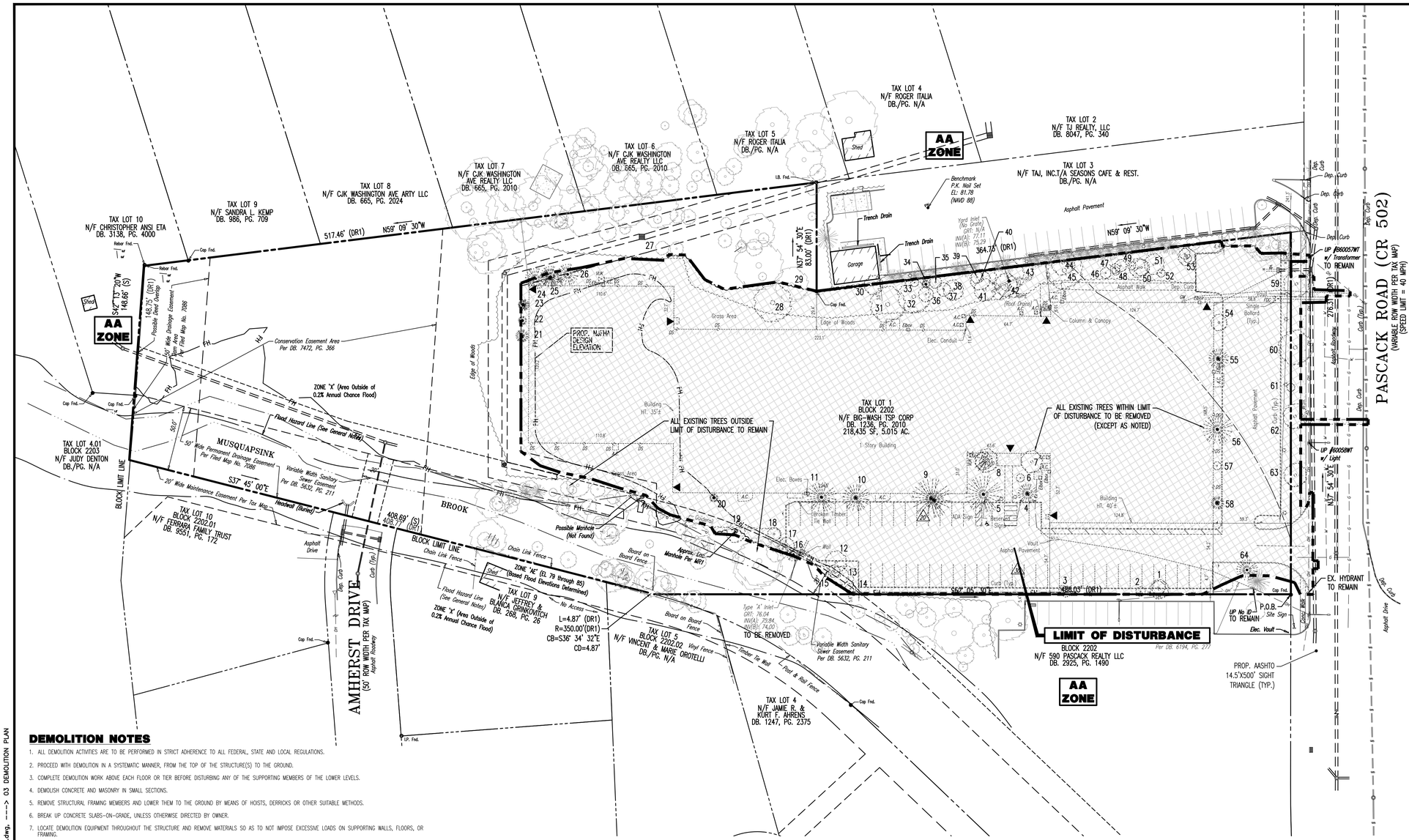

DEMOLITION NOTES

1. ALL DEMOLITION ACTIVITIES ARE TO BE PERFORMED IN STRICT ADHERENCE TO ALL FEDERAL, STATE AND LOCAL REGULATIONS.
2. PROCEED WITH DEMOLITION IN A SYSTEMATIC MANNER, FROM THE TOP OF THE STRUCTURE(S) TO THE GROUND.
3. COMPLETE DEMOLITION WORK ABOVE EACH FLOOR OR TIER BEFORE DISTURBING ANY OF THE SUPPORTING MEMBERS OF THE LOWER LEVELS.
4. DEMOLISH CONCRETE AND MASONRY IN SMALL SECTIONS.
5. REMOVE STRUCTURAL FRAMING MEMBERS AND LOWER THEM TO THE GROUND BY MEANS OF HOISTS, DERRICKS OR OTHER SUITABLE METHODS.
6. BREAK UP CONCRETE SLABS-ON-GRADE, UNLESS OTHERWISE DIRECTED BY OWNER.
7. LOCATE DEMOLITION EQUIPMENT THROUGHOUT THE STRUCTURE AND REMOVE MATERIALS SO AS TO NOT IMPOSE EXCESSIVE LOADS ON SUPPORTING WALLS, FLOORS, OR FRAMING.
8. PROVIDE INTERIOR AND EXTERIOR SHORING, BRACING AND SUPPORTS TO PREVENT MOVEMENT, SETTLEMENT OR COLLAPSE OF STRUCTURES TO BE DEMOLISHED (AND ADJACENT FACILITIES, IF APPLICABLE).
9. DEMOLISH AND REMOVE ALL FOUNDATION WALLS, FOOTINGS AND OTHER MATERIALS WITHIN THE AREA OF THE DESIGNATED FUTURE BUILDING. ALL OTHER FOUNDATION SYSTEMS, INCLUDING BASEMENTS, SHALL BE DEMOLISHED TO A DEPTH OF NOT LESS THAN ONE FOOT BELOW PROPOSED PAVEMENT OR, BRICK BASEMENT FLOOR SLABS. SEAL ALL OPEN UTILITY LINES WITH CONCRETE. CONTRACTOR TO REVIEW STRUCTURE PRIOR TO DEMOLITION TO DETERMINE IF BASEMENT, CRAWL SPACE OR ANY SUB-STRUCTURE EXISTS. ANY SUB-STRUCTURE, INCLUDING BASEMENTS SHALL BE REMOVED IN ITS ENTIRETY OR AS DIRECTED BY OWNER.
10. ERECT AND MAINTAIN COVERED PASSAGEWAYS IN ORDER TO PROVIDE SAFE PASSAGE FOR PERSONS AROUND THE AREA OF DEMOLITION. CONDUCT ALL DEMOLITION OPERATIONS IN A MANNER THAT WILL PREVENT DAMAGE AND PERSONAL INJURY TO STRUCTURES, ADJACENT BUILDINGS AND ALL PERSONS.
11. REFRAIN FROM USING ANY EXPLOSIVES WITHOUT PRIOR WRITTEN CONSENT OF OWNER AND APPLICABLE GOVERNMENTAL AUTHORITIES.
12. CONDUCT DEMOLITION SERVICES IN SUCH A MANNER TO ENSURE MINIMUM INTERFERENCE WITH ROADS, STREETS, WALKS AND OTHER ADJACENT FACILITIES. DO NOT CLOSE OR OBSTRUCT STREETS, WALKS, OR OTHER OCCUPIED FACILITIES WITHOUT PRIOR WRITTEN PERMISSION OF OWNER AND ANY APPLICABLE GOVERNMENTAL AUTHORITIES. PROVIDE ALTERNATE ROUTES AROUND CLOSED OR OBSTRUCTED TRAFFIC WAYS, IF REQUIRED BY APPLICABLE GOVERNMENTAL REGULATIONS.
13. USE WATERING, TEMPORARY ENCLOSURES AND OTHER SUITABLE METHODS, AS NECESSARY TO LIMIT THE AMOUNT OF DUST AND DIRT RISING AND SCATTERING IN THE AIR. CLEAN ADJACENT STRUCTURES AND IMPROVEMENTS OF ALL DUST AND DEBRIS CAUSED BY THE DEMOLITION OPERATIONS. RETURN ALL ADJACENT AREAS TO THE CONDITIONS EXISTING PRIOR TO THE START OF WORK.
14. ACCOMPLISH AND PERFORM THE DEMOLITION IN SUCH A MANNER AS TO PREVENT THE UNAUTHORIZED ENTRY OF PERSONS AT ANY TIME.
15. COMPLETELY FILL BELOW GRADE AREAS AND VOIDS RESULTING FROM THE DEMOLITION OF STRUCTURES AND FOUNDATIONS WITH SOIL MATERIALS IN ACCORDANCE WITH THE GEOTECHNICAL REPORT, CONSISTING OF STONE, GRAVEL AND SAND, FREE FROM DEBRIS, TRASH, FROZEN MATERIALS, ROOTS AND OTHER ORGANIC MATTER. STONES USED WILL NOT BE LARGER THAN 6 INCHES IN DIMENSION. MATERIAL FROM DEMOLITION MAY NOT BE USED AS FILL. PRIOR TO PLACEMENT OF FILL MATERIALS, UNDERTAKE ALL NECESSARY ACTION IN ORDER TO ENSURE THAT AREAS TO BE FILLED ARE FREE OF STANDING WATER, FROST, FROZEN MATERIAL, TRASH, DEBRIS. PLACE FILL MATERIALS IN HORIZONTAL LAYERS NOT EXCEEDING 6 INCHES IN LOOSE DEPTH AND COMPACT EACH LAYER AT PLACEMENT TO 95% OPTIMUM DENSITY. GRADE THE SURFACE TO MEET ADJACENT CONTOURS AND TO PROVIDE SURFACE DRAINAGE.
16. REMOVE FROM THE DESIGNATED SITE, AT THE EARLIEST POSSIBLE TIME, ALL DEBRIS, RUBBISH, SALVAGEABLE ITEMS, HAZARDOUS AND COMBUSTIBLE SERVICES. REMOVED MATERIALS MAY NOT BE STORED, SOLD OR BURNED ON THE SITE. REMOVAL OF HAZARDOUS AND COMBUSTIBLE MATERIALS SHALL BE ACCOMPLISHED IN ACCORDANCE WITH THE PROCEDURES AS AUTHORIZED BY THE FIRE DEPARTMENT OR OTHER APPROPRIATE REGULATORY AGENCIES AND AUTHORITIES.
17. DISCONNECT, SHUT OFF AND SEAL IN CONCRETE ALL UTILITIES SERVING THE STRUCTURE(S) TO BE DEMOLISHED BEFORE THE COMMENCEMENT OF THE DESIGNATED DEMOLITION. MARK FOR POSITION ALL UTILITY DRAINAGE AND SANITARY LINES AND PROTECT ALL ACTIVE LINES. CLEARLY IDENTIFY BEFORE THE COMMENCEMENT OF DEMOLITION SERVICES THE REQUIRED INTERRUPTION OF ACTIVE SYSTEMS THAT MAY AFFECT OTHER PARTIES, AND NOTIFY ALL APPLICABLE UTILITY COMPANIES TO ENSURE THE CONTINUATION OF SERVICE.
18. THIS DEMOLITION PLAN IS INTENDED TO IDENTIFY THOSE EXISTING CONDITIONS WHICH ARE TO BE REMOVED. IT IS NOT INTENDED TO PROVIDE DIRECTION OTHER THAN THAT ALL PROCEDURES ARE TO BE IN ACCORDANCE WITH STATE, FEDERAL, LOCAL, AND JURISDICTIONAL REQUIREMENTS. THE CONTRACTOR SHALL BE RESPONSIBLE FOR ALL SAFETY PRECAUTIONS NECESSARY.

NOTES

1. IN ACCORDANCE WITH STATE LAW, THE CONTRACTOR SHALL BE REQUIRED TO CALL THE BOARD OF PUBLIC UTILITIES ONE CALL DAMAGE PROTECTION SYSTEM OR UTILITY MARK OUT IN ADVANCE OF ANY EXCAVATION.
2. CONTRACTOR IS RESPONSIBLE FOR FIELD VERIFYING ALL EXISTING SITE IMPROVEMENTS AND UTILITIES. ALL DISCREPANCIES SHALL BE IDENTIFIED TO THE ENGINEER IN WRITING.
3. ALL EXISTING UTILITIES TO BE ABANDONED SHALL BE DISCONNECTED AND CAPPED AT THE MAIN FOR WATER, AT THE CLEAN-OUT FOR SEWER AND THE SHUT-OFF VALVE OR MAIN FOR GAS IN ACCORDANCE WITH MUNICIPAL AND LOCAL UTILITY REQUIREMENTS.
4. ALL EXISTING DEBRIS SHALL BE REMOVED BY CONTRACTOR IN ACCORDANCE WITH MUNICIPAL AND LOCAL UTILITY COMPANY REQUIREMENTS.

Tree #	Species	Common Name	DBH	Condition	# Replacement	Comments
1	Ulmus pumila	Siberian Elm	14"	OK	2	Invasive species
2	Acer platinoides	Norway Maple	7"	Dead	0	Invasive species
3	Acer platinoides	Norway Maple	8"	OK	2	Invasive species
4	Pinus strobus	Eastern White Pine	14"	OK	2	
5	Pinus strobus	Eastern White Pine	26"	OK	2	
6	Acer p. 'Bloodgood'	Japanese Maple	6"	OK	2	
7	Gleditsia triacanthus Inermis	Thornless Honey Locus	16"	OK	2	
8	Gleditsia triacanthus Inermis	Thornless Honey Locus	17"	OK	2	
9	Pinus strobus	Eastern White Pine	28"	OK	2	
10	Pinus strobus	Eastern White Pine	19"	OK	2	
11	Pinus strobus	Eastern White Pine	21"	OK	2	
12	Populus sp.	Poplar	16"	OK	2	
13	Acer platinoides	Norway Maple	14"	Poor	0	Invasive species
14	Fraxinus sp	Ash	8"	OK	2	
15	Pinus strobus	Eastern White Pine	9"	Poor	0	Falling over
16	Pinus strobus	Eastern White Pine	10"	OK	2	
17	Dead tree		12"	Dead	0	
18	Acer platinoides	Norway Maple	10"	OK	2	Invasive species
19	Dead tree		14"	Dead	0	
20	Pinus strobus	Eastern White Pine	6"	OK	2	
21	Tsuga canadensis	Canadian Hemlock	9"	OK	2	
22	Tsuga canadensis	Canadian Hemlock	6"	OK	2	
23	Tsuga canadensis	Canadian Hemlock	8"	OK	2	
24	Pinus strobus	Eastern White Pine	15"	OK	2	
25	Pinus strobus	Eastern White Pine	15"	OK	2	
26	Pinus strobus	Eastern White Pine	15"	OK	2	
27	Acer platinoides	Norway Maple	10"	Poor	0	Invasive species
28	Quercus palustis	Pin Oak	28"	OK	2	
29	Quercus palustis	Pin Oak	25"	OK	2	
30	Ulmus pumila	Siberian Elm	14"	OK	2	Invasive species
31	Acer saccharinum	Silver Maple	26"	OK	2	Invasive species
32	Acer saccharinum	Silver Maple	24"	Poor	0	Falling over
33	Acer saccharinum	Silver Maple	6"	OK	2	Invasive species
34	Pinus strobus	Eastern White Pine	6"	Poor	0	Falling over
35	Acer saccharinum	Silver Maple	9"	OK	2	Invasive species
36	Acer saccharinum	Silver Maple	11"	OK	2	Invasive species
37	Acer saccharinum	Silver Maple	10"	OK	2	Invasive species
38	Acer saccharinum	Silver Maple	15"	Dead	0	Invasive species
39	Acer saccharinum	Silver Maple	9"	OK	2	Invasive species
40	Acer saccharinum	Silver Maple	15"	OK	2	Invasive species
41	Acer saccharum	Sugar Maple	16"	OK	2	
42	Acer platinoides	Norway Maple	17"	OK	2	Invasive species
43	Ulmus pumila	Siberian Elm	22"	Leaning	0	Invasive species
44	Ulmus pumila	Siberian Elm	18"	OK	2	Invasive species
45	Ulmus pumila	Siberian Elm	27"	OK	2	Invasive species
46	Ulmus pumila	Siberian Elm	8"	OK	2	Invasive species
47	Ulmus pumila	Siberian Elm	7"	OK	2	Invasive species
48	Ulmus pumila	Siberian Elm	9"	OK	2	Invasive species
49	Ulmus pumila	Siberian Elm	6"	OK	2	Invasive species
50	Ulmus pumila	Siberian Elm	14"	OK	2	Invasive species
51	Ulmus pumila	Siberian Elm	15"	OK	2	Invasive species
52	Ulmus pumila	Siberian Elm	6"	OK	2	Invasive species
53	Acer saccharinum	Silver Maple	13"	OK	2	Invasive species
54	Acer platinoides	Norway Maple	12"	OK	2	Invasive species
55	Pinus strobus	Eastern White Pine	14"	OK	2	
56	Pinus strobus	Eastern White Pine	21"	OK	2	
57	Acer platinoides	Norway Maple	6"	OK	2	Invasive species
58	Pinus strobus	Eastern White Pine	9"	OK	2	
59	Acer platinoides	Norway Maple	19"	Poor	0	Pruned in half due to utility pruning
60	Acer platinoides	Norway Maple	25"	Poor	0	Pruned in half due to utility pruning
61	Acer platinoides	Norway Maple	6"	Poor	0	Invasive species
62	Acer platinoides	Norway Maple	18"	Poor	0	Pruned in half due to utility pruning
63	Acer platinoides	Norway Maple	17"	Poor	0	Pruned in half due to utility pruning
64	Pinus strobus	Eastern White Pine	15"	OK	2	

Total Replacement Trees Needed 98

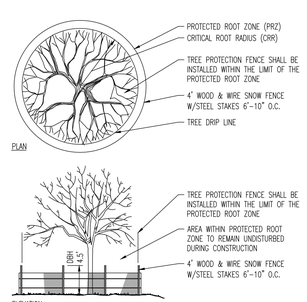

ESTIMATE A TREE'S PROTECTED ROOT ZONE (PRZ) BY CALCULATING THE CRITICAL ROOT RADIUS (CRR)
1. MEASURE THE DBH (DIAMETER OF TREE AT BREAST HEIGHT, 4.5' ABOVE GROUND ON THE UPHILL SIDE OF TREE) IN INCHES.
2. MULTIPLY MEASURED DBH BY 1.5 OR 1.0. EXPRESS THE RESULT IN FEET

DBH x 1.5: CRITICAL ROOT RADIUS FOR OLDER, UNHEALTHY, OR SENSITIVE SPECIES.
DBH x 1.0: CRITICAL ROOT RADIUS FOR YOUNGER, HEALTHY OR TOLERANT SPECIES.

TREE PROTECTION DURING SITE CONSTRUCTION DETAIL

NOT TO SCALE

DEMOLITION PLAN LEGEND

- PROPOSED LIMIT OF DISTURBANCE LINE
- TPF — TPF — PROPOSED TREE PROTECTION FENCE LINE
- EXISTING IMPROVEMENTS TO BE REMOVED UNLESS OTHERWISE NOTED

GRAPHIC SCALE

-40 0 20 40 80 160

(IN FEET)
1 INCH = 40 FT.

Rev.	Date	Comments	By
1	03/20/20	REVISED PER COMPLETENESS COMMENTS	JTG

THIS PLAN SET IS FOR PERMITTING PURPOSES ONLY AND MAY NOT BE USED FOR CONSTRUCTION

DYNAMIC ENGINEERING
LAND DEVELOPMENT CONSULTING • PERMITTING • GEOTECHNICAL • ENVIRONMENTAL • SURVEY • PLANNING & ZONING
Offices conveniently located in:
Lake Como, New Jersey T: 732.974.0198 | Chester, New Jersey T: 908.879.9229 | Newark, New Jersey T: 973.755.7200 | Toms River, New Jersey T: 732.974.0198
Allen, Texas T: 972.534.2100 | Austin, Texas T:512.646.2646 | Houston, Texas T: 281.789.6400
Newtown, Pennsylvania T: 267.685.0276 | Delray Beach, Florida T: 561.921.8570
245 Main Street - Suite 110
Chester, NJ 07930
T: 908.879.9229
F: 908.879.0222
www.dynamicec.com

TITLE:

DEMOLITION PLAN

PROJECT: **CAPITOL SENIORS HOUSING**
PROPOSED ASSISTED LIVING
BLOCK 2202, LOT 1
620 PASCACK ROAD (CR 502)
TOWNSHIP OT WASHINGTON, BERGEN COUNTY, NEW JERSEY

JOB No: 1423-99-003	DATE: 01/10/2020
DRAWN BY: LZ	SCALE: (H) 1"=20' (V)
DESIGNED BY: MLR	SHEET No: 3 OF 21
CHECKED BY: DTS	
CHECKED BY: _	Rev. # 1

JOSEPH G. JAWORSKI
PROFESSIONAL ENGINEER
NEW JERSEY LICENSE No. 34618

DANIEL T. SEHNAL
PROFESSIONAL ENGINEER
NEW JERSEY LICENSE No. 53572

811 PROTECT YOURSELF
ALL STATES REQUIRE NOTIFICATION OF EXCAVATORS, DESIGNERS, OR ANY PERSON PREPARING TO DISTURB THE EARTH'S SURFACE ANYWHERE IN ANY STATE
FOR STATE SPECIFIC DIRECT PHONE NUMBERS VISIT: WWW.CALL811.COM

Plotted: 03/25/20 – 1:41 PM, By: jgeiling, – Product Ver: 23.1s (LMS Tech)
File: P:\DECPC PROJECTS\1423 Capitol Seniors Housing\99-003 Washington\Dwg\Site Plans\D1423990SSR1.dwg, ----> 03 DEMOLITION PLAN

COPYRIGHT © 2020 – DYNAMIC ENGINEERING CONSULTANTS, PC – ALL RIGHTS RESERVED

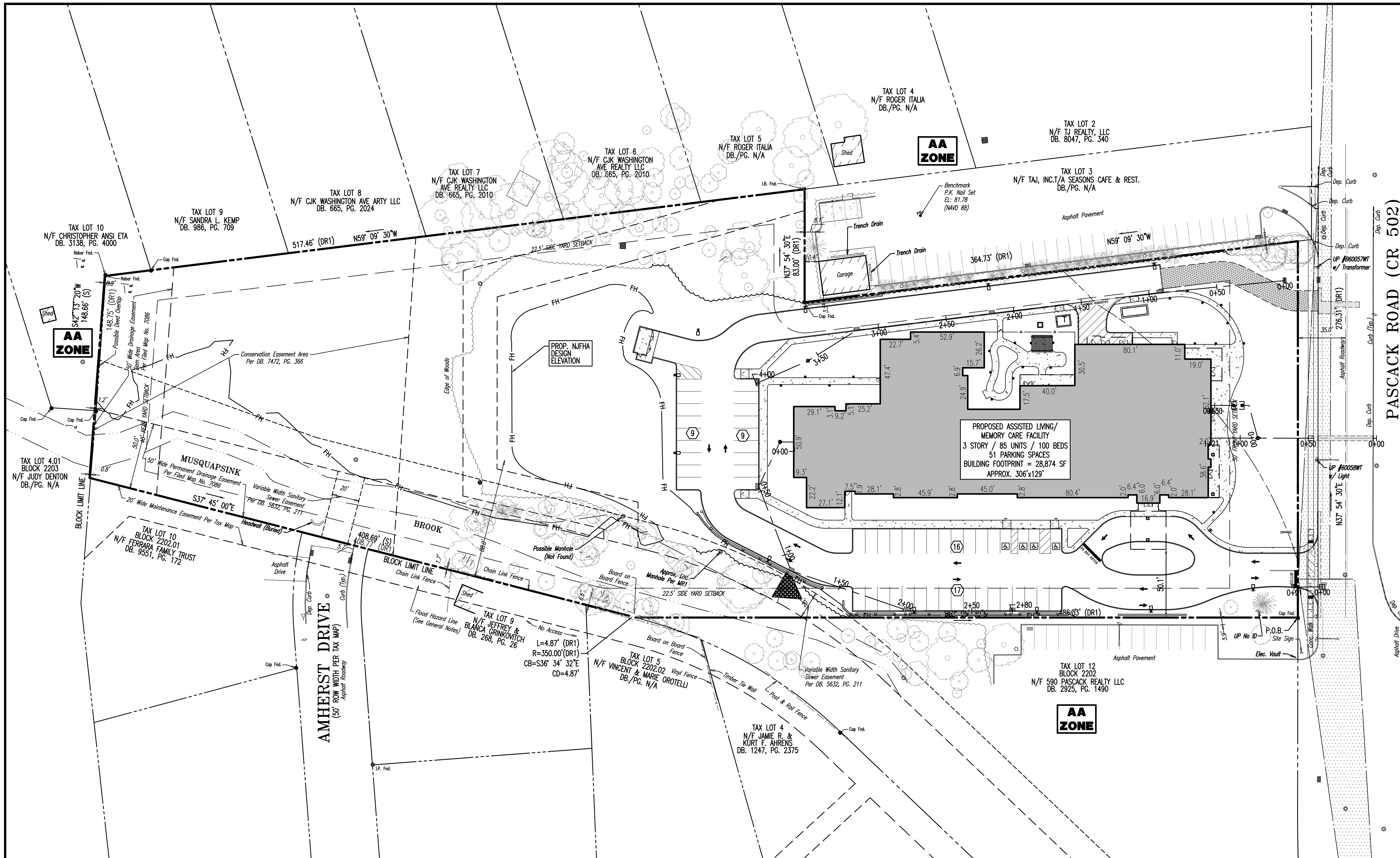

GENERAL NOTES

1. THIS PLAN HAS BEEN PREPARED BASED ON REFERENCES INCLUDING:

   ALTA/NSPS LAND TITLE SURVEY
   DYNAMIC SURVEY, LLC
   1904 MAIN STREET
   LAKE COMO, NJ 07719
   SURVEYOR FILE NO: 1423-99-003S
   DATED: 08/23/2019
   REVISED: 03/18/2020

   ARCHITECTURAL FLOOR PLANS
   MEYER DESIGN, INC.
   227 E. LANCASTER AVENUE
   ARDMORE, PA. 19003
   DATED: 12/04/2019

2. APPLICANT: CSH PASCACK, LLC
   C/O CAPITOL SENIORS HOUSING
   1275 PENNSYLVANIA, NW – 2ND FLOOR
   WASHINGTON, DC 20004

3. OWNER: BINGHAMTON-WASHINGTON TOWNSHIP CORP.
   C/O MR. MICHAEL SPIROPOULOS
   C/O BINGHAMTON RACQUET CLUB
   737 RIVER ROAD
   EDGEWATER, NEW JERSEY 07020

4. PARCEL DATA: BLOCK 2202, LOT 1
   620 PASCACK ROAD
   TOWNSHIP OF WASHINGTON
   BERGEN COUNTY, NEW JERSEY

5. ZONE: AA DISTRICT (ONE FAMILY RESIDENTIAL)

6. EXISTING USE: FITNESS CLUB **(NON-PERMITTED USE)** (§580-32)

7. PROPOSED USE: ASSISTED LIVING **(NON-PERMITTED USE)** (§580-32)

8. SCHEDULE OF ZONING REQUIREMENTS (§580)

ZONE REQUIREMENT	AA DISTRICT	EXISTING	PROPOSED
MINIMUM LOT AREA	0.5 AC	5.02 AC (218,435 SF)	5.02 AC (218,435 SF)
MINIMUM FRONTAGE	100.0'	276.31'	276.31'
MINIMUM FRONT YARD SETBACK	50.0'*	58.8'	55.7'
MINIMUM REAR YARD SETBACK	40.0'**	±294'	511.4'
MINIMUM REAR YARD SETBACK (ACCESSORY STRUCTURE)	10.0'	N/A	N/A
MINIMUM SIDE YARD SETBACK	22.5'***	29.4'	31.2'
MINIMUM COMBINED SIDE YARD SETBACK	N/S	83.6'	81.3'
MAXIMUM BUILDING HEIGHT	2.5 STORIES/30.0'	1 STORY / ±40'	3 STORIES / 39.5' **(V)**
MAXIMUM IMPERVIOUS SURFACE COVERAGE	N/S	45.0%	33.1%
MAXIMUM BUILDING COVERAGE	20.0%	±31.6%	14.1%
RESIDENTIAL DENSITY	N/S	N/A	16.9 UNITS/ACRE

N/S: NO STANDARD N/A: NOT APPLICABLE (E): EXISTING NON-CONFORMANCE (V): VARIANCE

*IN THE EVENT THE STREET ON WHICH SAID LOT OR PLOT ABUTS IS LESS THAN 50 FEET, THE DEPTH OF SUCH FRONT YARD SHALL BE INCREASED SO THAT THE DISTANCE BETWEEN THE CENTER LINE OF SAID STREET, IF WIDENED TO 50 FEET, AND THE BUILDING LINE PROPER IS NOT LESS THAN 60 FEET, NOT INCLUDING OPEN PORCHES

**FOR EACH FOOT THAT A RESIDENCE BUILDING ON THE LOT EXCEEDS A HEIGHT OF 25 FEET, THERE SHALL BE AN ADDED ONE FOOT TO THE REQUIREMENT 39.5'-25'=14.5' ROUNDED UP TO 15'X1'=15'; 25+15=40' REAR YARD SETBACK

***FOR EACH FOOT THAT A RESIDENCE BUILDING ON THE LOT EXCEEDS A HEIGHT OF 25 FEET, THERE SHALL BE AN ADDED SIX INCHES TO THE REQUIREMENT 39.5'-25'=14.5' ROUNDED UP TO 15'x6"=7.5'; 15+7.5=22.5' SIDE YARD SETBACK

9. PARKING REQUIREMENTS
   A. ALL OFF-STREET PARKING AREAS SHALL BE SURFACED WITH AN ASPHALT BITUMINOUS OR CEMENT BINDER PAVEMENT WHICH SHALL BE GRADED AND DRAINED TO DISPOSE OF ALL SURFACE WATER AS APPROVED BY THE TOWNSHIP ENGINEER. THERE SHALL BE A FIVE-FOOT SIDEWALK OR CURBED PLANTING AREA OF AT LEAST FOUR INCHES ABOVE GROUND BETWEEN ANY BUILDING AND A PARKING AREA USED BY THE PUBLIC. (§540-80.A)**(COMPLIES)**
   B. THE OFF-STREET PARKING AREA SHALL BE EFFECTIVELY SCREENED ON ANY SIDE WHICH ADJOINS OR FACES PREMISES CURRENTLY USED AS A RESIDENCE BY A SOLID UNIFORM FENCE OR WALL NOT LESS THAN FOUR NOR MORE THAN SIX FEET IN HEIGHT, IN GOOD CONDITION; PROVIDED, HOWEVER, THAT WHERE THE ADJACENT OWNERS AGREE IN WRITING, A SCREENING OR HEDGE OR OTHER NATURAL LANDSCAPING MAY BE SUBSTITUTED FOR THE REQUIRED FENCE OR WALL. (§540-80.C)**(COMPLIES)**
   C. ALL PARKING SPACES SHALL HAVE A MINIMUM OF 180 SQUARE FEET AND SHALL BE NOT LESS THAN NINE FEET IN WIDTH. (§540-80.G)**(COMPLIES)**
   D. ALL PARKING AREAS SHALL BE DESIGNED WITH SERVICE AISLES TO MEET THE FOLLOWING STANDARDS: SIXTY-ONE-DEGREE TO NINETY-DEGREE ANGLE PARKING AND ACCESS DRIVES: TWENTY-FOUR-FOOT AISLE WIDTH. (§540-80.H.1.d)**(COMPLIES)**
   E. ONLY ONE-WAY TRAFFIC CIRCULATION SHALL BE PERMITTED IN TWELVE-, FOURTEEN-, AND EIGHTEEN-FOOT AISLE WIDTHS. (§540-80.H.2)**(COMPLIES)**
   F. OFF-STREET PARKING FACILITIES ARE PROHIBITED IN THE REQUIRED FRONT YARD. (§540-80)**(COMPLIES)**
   G. PARKING SPACES PER RSIS (§ NJAC 9:21-4.14(B): ASSISTED LIVING RESIDENTIAL USE; 0.5 SPACES/UNIT
   THEREFORE: 85 DWELLING UNITS x 0.5 = 42.5 (43) PARKING SPACES REQUIRED, 51 SPACES PROPOSED **(COMPLIES)**

10. PER NJSA §26.2H-12.16, A NEW FACILITY THAT IS LICENSED BY THE N.J. DEPARTMENT OF HEALTH TO OPERATE AS AN ASSISTED LIVING RESIDENCE SHALL RESERVE 10% OF ITS TOTAL BED COMPLEMENT FOR USE BY MEDICAID-ELIGIBLE PERSONS. AS A RESULT, A TOTAL OF 10 OUT OF 100 BEDS PROPOSED OF PER THE CERTIFICATE OF NEED SATISFIES THE APPLICANT'S AFFORDABLE HOUSING OBLIGATION UNDER NEW JERSEY STATUTORY LAW.
11. THE APPLICANT REQUESTS ANY AND ALL SUBMISSION WAIVERS THAT ARE NOT SPECIFICALLY IDENTIFIED HEREIN. TESTIMONY WILL BE SUPPLIED AT THE PUBLIC HEARING TO SUPPORT SAID SUBMISSION WAIVERS.
12. PRIOR TO STARTING CONSTRUCTION, THE CONTRACTOR SHALL BE RESPONSIBLE TO MAKE SURE THAT ALL REQUIRED PERMITS AND APPROVALS HAVE BEEN OBTAINED. NO CONSTRUCTION OR FABRICATION SHALL BEGIN UNTIL THE CONTRACTOR HAS RECEIVED AND THOROUGHLY REVIEWED ALL PLANS AND OTHER DOCUMENTS BY ALL OF THE PERMITTING AUTHORITIES.
13. ALL WORK SHALL BE PERFORMED IN ACCORDANCE WITH THESE PLANS AND SPECIFICATIONS AND THE REQUIREMENTS AND STANDARDS OF THE LOCAL GOVERNING AUTHORITY.
14. THE SOILS REPORT AND RECOMMENDATIONS SET FORTH THEREIN ARE A PART OF THE REQUIRED CONSTRUCTION DOCUMENTS AND IN CASE OF CONFLICT SHALL TAKE PRECEDENCE UNLESS SPECIFICALLY NOTED OTHERWISE ON THE PLANS. THE CONTRACTOR SHALL NOTIFY THE ENGINEER CONSTRUCTION MANAGER OF ANY DISCREPANCY BETWEEN SOILS REPORT & PLANS.
15. SITE CLEARING SHALL INCLUDE THE LOCATION AND REMOVAL OF ALL UNDERGROUND TANKS, PIPES, VALVES, ETC.
16. THE PROPERTY SURVEY SHALL BE CONSIDERED A PART OF THESE PLANS.
17. ALL DIMENSIONS SHOWN ON THE PLANS SHALL BE FIELD VERIFIED BY THE CONTRACTOR PRIOR TO CONSTRUCTION. CONTRACTOR SHALL NOTIFY ENGINEER IF ANY DISCREPANCIES EXIST PRIOR TO PROCEEDING WITH CONSTRUCTION FOR NECESSARY PLAN CHANGES. NO EXTRA COMPENSATION SHALL BE PAID TO THE CONTRACTOR FOR WORK HAVING TO BE REDONE DUE TO DIMENSIONS OR GRADES SHOWN INCORRECTLY ON THESE PLANS IF SUCH NOTIFICATION HAS NOT BEEN GIVEN.
18. SOLID WASTE TO BE DISPOSED OF BY CONTRACTOR IN ACCORDANCE WITH ALL LOCAL, STATE AND FEDERAL REGULATIONS.
19. ALL EXCAVATED UNSUITABLE MATERIAL MUST BE TRANSPORTED TO AN APPROVED DISPOSAL LOCATION.
20. CONTRACTOR IS RESPONSIBLE FOR ALL SHORING REQUIRED DURING EXCAVATION AND SHALL BE PERFORMED IN ACCORDANCE WITH CURRENT OSHA STANDARDS, AS WELL AS ADDITIONAL PROVISIONS TO ASSURE STABILITY OF CONTIGUOUS STRUCTURES, AS FIELD CONDITIONS DICTATE.
21. ALL CONTRACTORS MUST CARRY STATUTORY WORKERS COMPENSATION, EMPLOYERS LIABILITY INSURANCE AND APPROPRIATE LIMITS OF COMMERCIAL GENERAL LIABILITY INSURANCE (CGL). ALL CONTRACTORS MUST HAVE THEIR CGL POLICIES ENDORSED TO NAME DYNAMIC ENGINEERING CONSULTANTS, P.C. , ITS SUBCONSULTANTS AS ADDITIONAL INSURED AND TO PROVIDE CONTRACTUAL LIABILITY COVERAGE SUFFICIENT TO INSURE THE HOLD HARMLESS AND INDEMNITY OBLIGATIONS ASSUMED BY THE CONTRACTORS. ALL CONTRACTORS MUST FURNISH DYNAMIC ENGINEERING CONSULTANTS, P.C. WITH CERTIFICATES OF INSURANCE AS EVIDENCE OF THE REQUIRED INSURANCE PRIOR TO COMMENCING WORK AND UPON RENEWAL OF EACH POLICY DURING THE ENTIRE PERIOD OF CONSTRUCTION. IN ADDITION, ALL CONTRACTORS WILL, TO THE FULLEST EXTENT PERMITTED BY LAW, INDEMNIFY AND HOLD HARMLESS DYNAMIC ENGINEERING CONSULTANTS, P.C. AND ITS SUBCONSULTANTS FROM AND AGAINST ANY DAMAGES, LIABILITIES OR COSTS, INCLUDING REASONABLE ATTORNEYS' FEES AND DEFENSE COSTS, ARISING OUT OF OR IN ANY WAY CONNECTED WITH THE PROJECT, INCLUDING ALL CLAIMS BY EMPLOYEES OF THE CONTRACTORS.
22. NEITHER THE PROFESSIONAL ACTIVITIES OF DYNAMIC ENGINEERING CONSULTANTS, P.C., NOR THE PRESENCE OF DYNAMIC ENGINEERING CONSULTANTS, P.C. OR ITS EMPLOYEES AND SUBCONSULTANTS AT A CONSTRUCTION/PROJECT SITE, SHALL RELIEVE THE GENERAL CONTRACTOR OF ITS OBLIGATIONS, DUTIES AND RESPONSIBILITIES INCLUDING, BUT NOT LIMITED TO, CONSTRUCTION MEANS, METHODS, SEQUENCE, TECHNIQUES OR PROCEDURES NECESSARY FOR PERFORMING, SUPERINTENDING AND COORDINATING THE WORK IN ACCORDANCE WITH THE CONTRACT DOCUMENTS AND ANY HEALTH OR SAFETY PRECAUTIONS REQUIRED BY ANY REGULATORY AGENCIES. DYNAMIC ENGINEERING CONSULTANTS, P.C. AND ITS PERSONNEL HAVE NO AUTHORITY TO EXERCISE ANY CONTROL OVER ANY CONSTRUCTION CONTRACTOR OR ITS EMPLOYEES IN CONNECTION WITH THEIR WORK OR ANY HEALTH OR SAFETY PROGRAMS OR PROCEDURES. THE GENERAL CONTRACTOR SHALL BE SOLELY RESPONSIBLE FOR JOBSITE SAFETY. DYNAMIC ENGINEERING CONSULTANTS, P.C. SHALL BE INDEMNIFIED BY THE GENERAL CONTRACTOR AND SHALL BE MADE ADDITIONAL INSURED UNDER THE GENERAL CONTRACTOR'S POLICIES OF GENERAL LIABILITY INSURANCE.
23. DYNAMIC ENGINEERING CONSULTANTS, P.C. SHALL REVIEW AND APPROVE OR TAKE OTHER APPROPRIATE ACTION ON THE CONTRACTOR SUBMITTALS, SUCH AS SHOP DRAWINGS, PRODUCT DATA, SAMPLES AND OTHER DATA, WHICH THE CONTRACTOR IS REQUIRED TO SUBMIT, BUT ONLY FOR THE LIMITED PURPOSE OF CHECKING FOR CONFORMANCE WITH THE DESIGN CONCEPT AND THE INFORMATION SHOWN IN THE CONSTRUCTION MEANS OR METHODS, COORDINATION OF THE WORK WITH OTHER TRADES OR CONSTRUCTION SAFETY PRECAUTIONS, ALL OF WHICH ARE THE SOLE RESPONSIBILITY OF THE CONTRACTOR. DYNAMIC ENGINEERING'S REVIEW SHALL BE CONDUCTED WITH REASONABLE PROMPTNESS WHILE ALLOWING SUFFICIENT TIME TO PERMIT ADEQUATE REVIEW. REVIEW OF A SPECIFIC ITEM SHALL NOT INDICATE THAT DYNAMIC ENGINEERING CONSULTANTS, P.C. HAS REVIEWED THE ENTIRE ASSEMBLY OF WHICH THE ITEM IS A COMPONENT. DYNAMIC ENGINEERING CONSULTANTS, P.C. SHALL NOT BE RESPONSIBLE FOR ANY DEVIATIONS FROM THE CONSTRUCTION DOCUMENTS NOT BROUGHT TO THE ATTENTION OF DYNAMIC ENGINEERING CONSULTANTS, P.C. IN WRITING BY THE CONTRACTOR. DYNAMIC ENGINEERING CONSULTANTS, P.C. SHALL NOT BE REQUIRED TO REVIEW PARTIAL SUBMISSIONS OR THOSE FOR WHICH SUBMISSIONS OF CORRELATED ITEMS HAVE NOT BEEN RECEIVED.
24. IN AN EFFORT TO RESOLVE ANY CONFLICTS THAT ARISE DURING THE DESIGN AND CONSTRUCTION OF THE PROJECT OR FOLLOWING THE COMPLETION OF THE PROJECT, DYNAMIC ENGINEERING CONSULTANTS, P.C. AND THE CONTRACTOR MUST AGREE THAT ALL DISPUTES BETWEEN THEM ARISING OUT OF OR RELATING TO THIS AGREEMENT OR THE PROJECT SHALL BE SUBMITTED TO NONBINDING MEDIATION UNLESS THE PARTIES MUTUALLY AGREE OTHERWISE.
25. THE CONTRACTOR MUST INCLUDE A MEDIATION PROVISION IN ALL AGREEMENTS WITH INDEPENDENT SUBCONTRACTORS AND CONSULTANTS RETAINED FOR THE PROJECT AND TO REQUIRE ALL INDEPENDENT CONTRACTORS AND CONSULTANTS ALSO TO INCLUDE A SIMILAR MEDIATION PROVISION IN ALL AGREEMENTS WITH THEIR SUBCONTRACTORS, SUBCONSULTANTS, SUPPLIERS AND FABRICATORS, THEREBY PROVIDING FOR MEDIATION AS THE PRIMARY METHOD FOR DISPUTE RESOLUTION BETWEEN THE PARTIES TO ALL THOSE AGREEMENTS.
26. IF THE CONTRACTOR DEVIATES FROM THE PLANS AND SPECIFICATIONS, INCLUDING THE NOTES CONTAINED THEREON, WITHOUT FIRST OBTAINING PRIOR WRITTEN AUTHORIZATION FOR SUCH DEVIATIONS FROM THE OWNER AND ENGINEER, IT SHALL BE RESPONSIBLE FOR THE PAYMENT OF ALL COSTS TO CORRECT ANY WORK DONE, ALL FINES OR PENALTIES ASSESSED WITH RESPECT THERETO AND ALL COMPENSATORY OR PUNITIVE DAMAGES RESULTING THEREFROM AND IT SHALL INDEMNIFY AND HOLD THE OWNER AND ENGINEER HARMLESS FROM ALL SUCH COSTS TO CONNECT ANY SUCH WORK AND FROM ALL SUCH FINES AND PENALTIES, COMPENSATION AND PUNITIVE DAMAGES AND COSTS OF ANY NATURE RESULTING THEREFROM.
27. ALL TRAFFIC SIGNS AND STRIPING SHALL FOLLOW THE REQUIREMENTS SPECIFIED IN THE MANUAL ON "UNIFORM TRAFFIC CONTROL DEVICES FOR STREETS AND HIGHWAYS" PUBLISHED BY THE FEDERAL HIGHWAY ADMINISTRATION.
28. THE BUILDING SETBACK DIMENSIONS ILLUSTRATED AND LISTED ON THE SITE PLAN DRAWINGS ARE MEASURED FROM THE OUTSIDE SURFACE OF BUILDING WALLS. THESE SETBACK DIMENSIONS DO NOT ACCOUNT FOR ROOF OVERHANGS, ORNAMENTAL ELEMENTS, SIGNAGE OR OTHER EXTERIOR EXTENSIONS UNLESS SPECIFICALLY NOTED.
29. CONTRACTOR ACKNOWLEDGES HE HAS READ AND UNDERSTOOD THE DESIGN PHASE SOIL PERMEABILITY AND GROUNDWATER TEST RESULTS IN THE STORMWATER MANAGEMENT REPORT AND THAT THE CONTRACTORS RESPONSIBILITIES INCLUDE NECESSARY PROVISIONS TO ACHIEVE THE DESIGN PERMEABILITY IN THE FIELD.
30. CONTRACTOR TO BE ADVISED THAT THE ENGINEER WAS NOT PROVIDED WITH FINAL FLOOR PLAN DRAWINGS FOR THE BUILDING AT THE TIME OF SITE PLAN DESIGN. AS A RESULT, ENTRANCE DOOR LOCATIONS AS DEPICTED HEREON MAY NOT BE FINAL AND MUST BE CONFIRMED WITH THE ARCHITECTURAL PLANS PRIOR TO CONSTRUCTION. THE HANDICAP ACCESSIBLE PARKING SPACES AND THE ASSOCIATED RAMPS AND ACCESSIBLE ROUTE MUST COMPLY WITH NJAC 5:23-7 AND THE HANDICAP PARKING SPACES MUST BE LOCATED AS THE NEAREST SPACES TO THE ENTRANCE. CONTRACTOR TO NOTIFY OWNER AND ENGINEER IMMEDIATELY OF ANY DISCREPANCY PRIOR TO CONSTRUCTION.

BERGEN COUNTY NOTES

1. ALL TRAFFIC SIGNS MUST CONFORM IN FACE DESIGN AND CONSTRUCTION TO SPECIFICATIONS FOUND IN THE MANUAL ON UNIFORM TRAFFIC CONTROL DEVICES, U.S. D.O.T., FEDERAL HIGHWAY ADMINISTRATION. SPECIFICALLY, REGULATORY AND WARNING SIGNS SHALL BE FABRICATED OF FLAT ALUMINUM SHEETS AND SHALL BE COVERED WITH ASTM D4956 TYPE X1 SUPER HIGH EFFICIENCY FULL CUBE RETRO-REFLECTIVE SHEETING.
2. ANY PROPOSED PLANTINGS ALONG THE PROPOSED TWO-WAY DRIVEWAY SHALL HAVE A MATURE HEIGHT OF THIRTY (30) INCHES OR LESS, MEASURED FROM THE DRIVEWAY PAVEMENT, TO ENSURE ADEQUATE SIGHT DISTANCE ALONG TAPPAN ROAD. ANY PROPOSED PLANTINGS MAY NEED TO BE REMOVED AND/OR RELOCATED PER REQUIREMENT B-16 BELOW.
3. COUNTY SIGHT DISTANCE CRITERIA – THE DRIVER'S POSITION SHALL BE FIFTEEN (15) FEET BEHIND THE CURB LINE. THE DRIVER'S EYE LEVEL SHOULD BE SET AT A POINT THREE AND A HALF (3.5) FEET ABOVE THE DRIVEWAY PAVEMENT AND THE DRIVER SHOULD BE CAPABLE OF SEEING AN OBJECT TWO (2) FEET HIGH PLACED IN THE CENTER OF ALL LANES. DEPICTED SIGHT DISTANCES REFLECT MAXIMUM CLEAR SIGHT DISTANCE.
4. ALL MATERIALS AND CONSTRUCTION PERFORMED IN ANY OF THE COUNTY OF BERGEN'S RIGHT-OF-WAY/ROAD WIDENING EASEMENT SHALL BE IN ACCORDANCE WITH CURRENTLY ADOPTED NEW JERSEY DEPARTMENT OF TRANSPORTATION STANDARD SPECIFICATIONS FOR ROAD AND BRIDGE CONSTRUCTION (2007 EDITION OR NEWER) AS MODIFIED BY ANY SUPPLEMENTAL SPECIFICATIONS AND AMENDMENTS BY THE N.J. D.O.T. AND COUNTY OF BERGEN SPECIFICATIONS. THIS WORK INCLUDES BUT IS NOT LIMITED TO THE FOLLOWING: MONUMENTS, REFERENCE MARKERS, CURBS, SIDEWALKS, GUIDE RAIL, GUIDE RAIL END TREATMENTS, FENCES, RETAINING WALLS, STORM DRAINAGE PIPES, STORM DRAINAGE STRUCTURES, BRIDGES, CULVERTS AND ROADWAY CONSTRUCTION. OMISSION AND/OR CORRECTIONS DEEMED NECESSARY TO CONFORM TO ANY SPECIFICATIONS AND DETAILS SHALL BE THE RESPONSIBILITY OF THE PROJECT'S APPLICANT. DEVELOPER, CONTRACTOR AND/OR PROPERTY OWNER.
5. ALL EXISTING TRAFFIC CONTROL SIGNS SHALL BE RESET AT THE TIME OF CONSTRUCTION AND NOT STOCKPILED.
6. THE APPLICANT/PROPERTY OWNER SHALL BE RESPONSIBLE TO MAINTAIN SIGHT LINES, ALONG THE SUBJECT PROPERTY FRONTAGE, FOR AN EXITING VEHICLE FROM THE PROPERTY ONTO TAPPAN ROAD. THIS INCLUDES THE REMOVAL OF ANY IDENTIFIED OBSTRUCTIONS (E.G. TREES, LIMBS, BRANCHES, ORNAMENTAL WALLS AND GROUND BRUSH) WITHIN THE COUNTY RIGHT-OF-WAY / COUNTY EASE

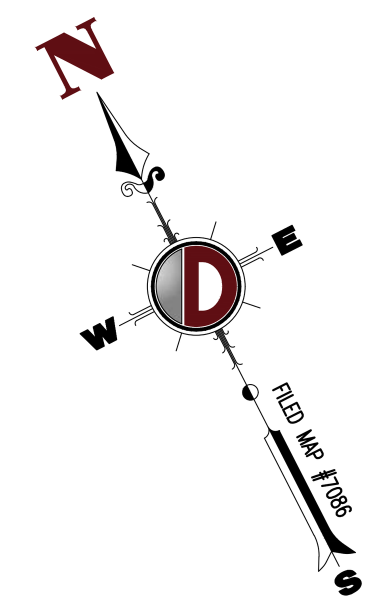

GRAPHIC SCALE

-40 0 20 40 80 160

(IN FEET)
1 INCH = 40 FT.

THIS PLAN SET IS FOR PERMITTING PURPOSES ONLY AND MAY NOT BE USED FOR CONSTRUCTION

Rev.	Date	Comments	By
1	03/20/20	REVISED PER COMPLETENESS COMMENTS	JTG

DYNAMIC ENGINEERING
LAND DEVELOPMENT CONSULTING • PERMITTING • GEOTECHNICAL • ENVIRONMENTAL • SURVEY • PLANNING & ZONING
Offices conveniently located in:
Lake Como, New Jersey T: 732.974.0198 | Chester, New Jersey T: 908.879.9229 | Newark, New Jersey T: 973.755.7200 | Toms River, New Jersey T: 732.974.0198
Allen, Texas T: 972.534.2100 | Austin, Texas T:512.646.2646 | Houston, Texas T: 281.789.6400
Newtown, Pennsylvania T: 267.685.0276 | Delray Beach, Florida T: 561.921.8570
245 Main Street - Suite 110
Chester, NJ 07930
T: 908.879.9229
F: 908.879.0222
www.dynamicec.com

TITLE:
OVERALL SITE PLAN

PROJECT: **CAPITOL SENIORS HOUSING**
PROPOSED ASSISTED LIVING
BLOCK 2202, LOT 1
620 PASCACK ROAD (CR 502)
TOWNSHIP OT WASHINGTON, BERGEN COUNTY, NEW JERSEY

JOB No: 1423-99-003
DATE: 01/10/2020
DRAWN BY: JTG/DJS
SCALE: (H) 1"=40' (V) _
DESIGNED BY: MLR
CHECKED BY: DTS
CHECKED BY: _
SHEET No: 4 OF 21
Rev. # 1

JOSEPH G. JAWORSKI
PROFESSIONAL ENGINEER
NEW JERSEY LICENSE No. 36618

DANIEL T. SEHNAL
PROFESSIONAL ENGINEER
NEW JERSEY LICENSE No. 53572

811 PROTECT YOURSELF
ALL STATES REQUIRE NOTIFICATION OF EXCAVATORS, DESIGNERS, OR ANY PERSON PREPARING TO DISTURB THE EARTH'S SURFACE ANYWHERE IN ANY STATE
Know what's below. Call before you dig.
FOR STATE SPECIFIC DIRECT PHONE NUMBERS VISIT: WWW.CALL811.COM

Plotted: 03/25/20 – 1:41 PM, By: jgoellner, – Product Ver: 23.1s (LMS Tech)
File: P:\DECPC PROJECTS\1423 Capitol Seniors Housing\99-003 Washington\Dwg\Site Plans\D142399003SXS.dwg, ---> 04 OVERALL SITE PLAN

COPYRIGHT © 2020 – DYNAMIC ENGINEERING CONSULTANTS, PC – ALL RIGHTS RESERVED

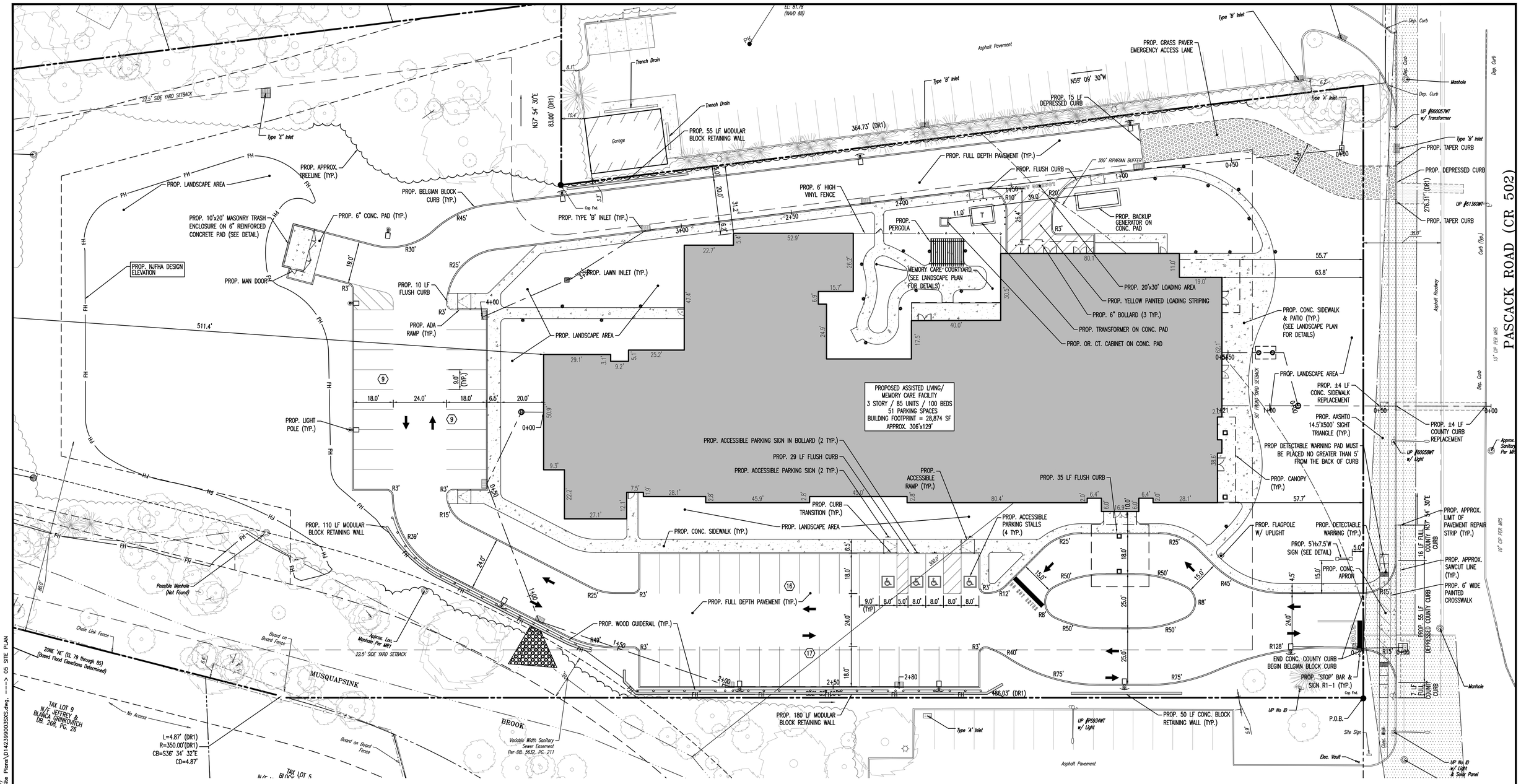

APPROVED BY THE COUNTY PLANNING BOARD, COUNTY OF BERGEN, NEW JERSEY

ATTESTED TO BY: DATE

GRAPHIC SCALE

-20 0 10 20 40 80

(IN FEET)
1 INCH = 20 FT.

SEE SHEET 4 OF 21 FOR SITE PLAN NOTES

Rev.	Date	Comments	By
1	03/20/20	REVISED PER COMPLETENESS COMMENTS	JTG

THIS PLAN SET IS FOR PERMITTING PURPOSES ONLY AND MAY NOT BE USED FOR CONSTRUCTION

DYNAMIC ENGINEERING
LAND DEVELOPMENT CONSULTING • PERMITTING • GEOTECHNICAL • ENVIRONMENTAL • SURVEY • PLANNING & ZONING
Offices conveniently located in:
Lake Como, New Jersey T: 732.974.0198 | Chester, New Jersey T: 908.879.9229 | Newark, New Jersey T: 973.753.7200 | Toms River, New Jersey T: 732.974.0198
Allen, Texas T: 972.334.2100 | Austin, Texas T:512.646.2646 | Houston, Texas T: 281.789.6400
Newtown, Pennsylvania T: 267.685.0276 | Delray Beach, Florida T: 561.921.8570
245 Main Street - Suite 110
Chester, NJ 07930
T: 908.879.9229
F: 908.879.0222
www.dynamicec.com

TITLE:

SITE PLAN

PROJECT: **CAPITOL SENIORS HOUSING**
PROPOSED ASSISTED LIVING
BLOCK 2202, LOT 1
620 PASCACK ROAD (CR 502)
TOWNSHIP OT WASHINGTON, BERGEN COUNTY, NEW JERSEY

JOB No: 1423-99-003	DATE: 01/10/2020
DRAWN BY: JTG/DJS	SCALE: (H) 1"=20' (V)
DESIGNED BY: MLR	SHEET No: 5
CHECKED BY: DTS	OF 21
CHECKED BY: _	Rev. # 1

JOSEPH G. JAWORSKI
PROFESSIONAL ENGINEER
NEW JERSEY LICENSE No. 36618

DANIEL T. SEHNAL
PROFESSIONAL ENGINEER
NEW JERSEY LICENSE No. 53572

811 PROTECT YOURSELF
ALL STATES REQUIRE NOTIFICATION OF EXCAVATORS, DESIGNERS, OR ANY PERSON PREPARING TO DISTURB THE EARTH'S SURFACE ANYWHERE IN ANY STATE
Know what's below. Call before you dig.
FOR STATE SPECIFIC DIRECT PHONE NUMBERS VISIT: WWW.CALL811.COM

Plotted: 03/25/20 – 1:42 PM, By: jpoeliner, – Product Ver: 23.1s (LMS Tech)
File: P:\DEGPC PROJECTS\1423 Capitol Seniors Housing\99-003 Washington\Dwg\Site Plans\D1423990035XS.dwg, ----> 05 SITE PLAN

COPYRIGHT © 2020 – DYNAMIC ENGINEERING CONSULTANTS, PC – ALL RIGHTS RESERVED

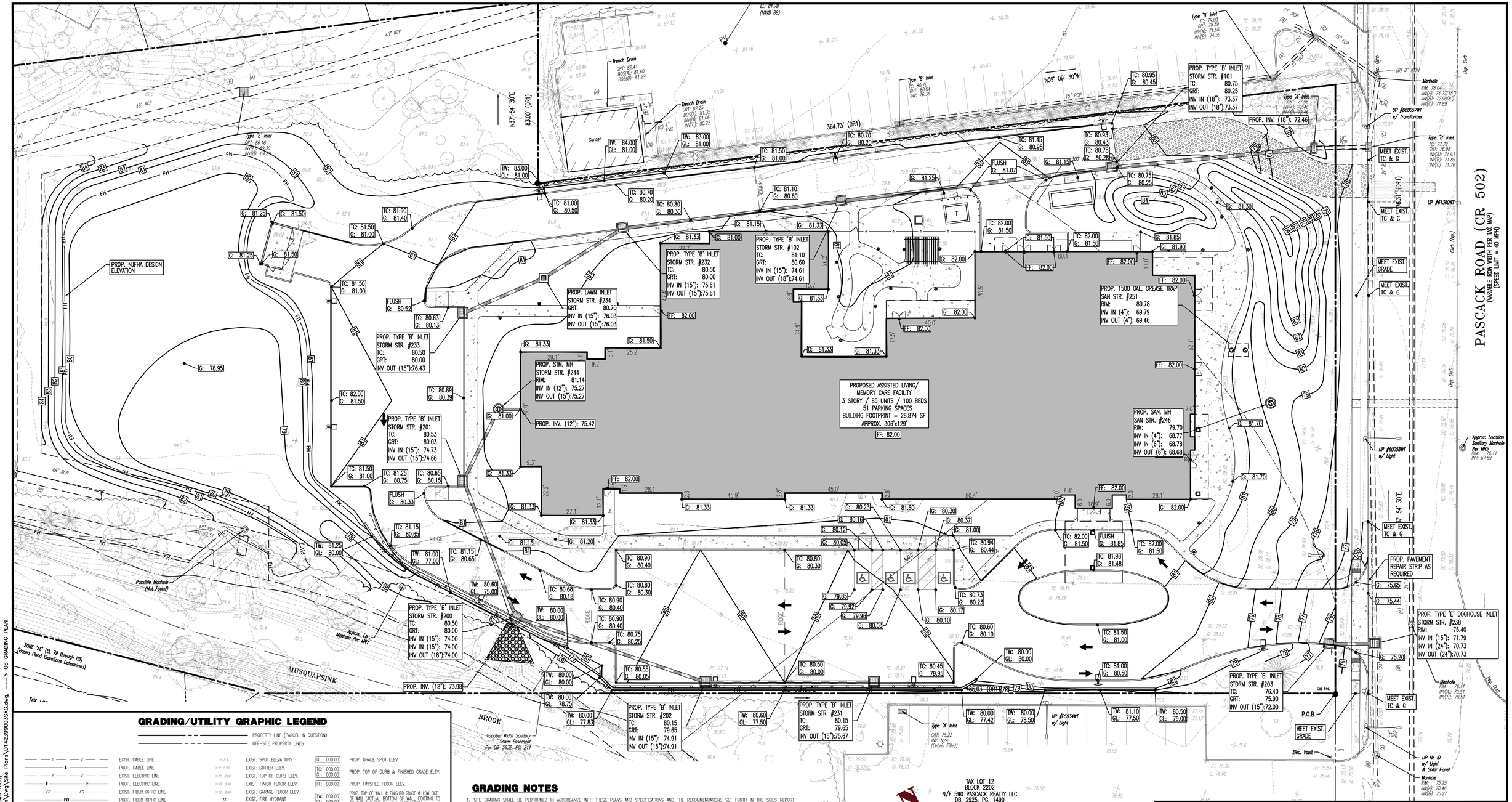

GRADING/UTILITY GRAPHIC LEGEND

PROPERTY LINE (PARCEL IN QUESTION)
OFF-SITE PROPERTY LINES

EXIST. CABLE LINE	EXIST. SPOT ELEVATIONS	G: 000.00	PROP. GRADE SPOT ELEV.
PROP. CABLE LINE	EXIST. GUTTER ELEV.	TC: 000.00 G: 000.00	PROP. TOP OF CURB & FINISHED GRADE ELEV.
EXIST. ELECTRIC LINE	EXIST. TOP OF CURB ELEV.	FF: 000.00	PROP. FINISHED FLOOR ELEV.
PROP. ELECTRIC LINE	EXIST. FINISH FLOOR ELEV.		
EXIST. FIBER OPTIC LINE	EXIST. GARAGE FLOOR ELEV.	TW: 000.00 GL: 000.00	PROP. TOP OF WALL & FINISHED GRADE @ LOW SIDE OF WALL (ACTUAL BOTTOM OF WALL FOOTING TO BE ESTABLISHED BY WALL DESIGNER)
PROP. FIBER OPTIC LINE	EXIST. FIRE HYDRANT		
EXIST. FUEL LINE	EXIST. WATER VALVE	TC: 000.00 GH: 000.00 GL: 000.00	PROP. TOP OF EXTENDED CURB, (GH) FINISHED GRADE @ HIGH SIDE OF EXTENDED CURB & (GL) FINISHED GRADE @ LOW SIDE OF EXTENDED CURB
PROP. FUEL LINE	EXIST. GAS VALVE		
EXIST. OVERHEAD WIRES	EXIST. GAS METER		
PROP. OVERHEAD WIRES	EXIST. ELECTRIC METER		
EXIST. TELEPHONE LINE	EXIST. ELECTRIC BOX		PROP. DIRECTION OF DRAINAGE FLOW ARROW
PROP. TELEPHONE LINE	EXIST. CLEAN OUT		
EXIST. UNDERGROUND ELEC./TELE. SERVICE (NO. & SIZE OF CONDUITS NOT DEFINED)	EXIST. WELL		PROP. WATER VALVE
	EXIST. WATER SHUT OFF VALVE		PROP. GAS VALVE
PROP. UNDERGROUND ELEC./TELE. SERVICE (NO. & SIZE OF CONDUITS NOT DEFINED)	EXIST. TELEPHONE BOX		
	EXIST. CABLE TV BOX		
EXIST. WATER LINE	EXIST. UTILITY POLE		PROP. STORM CLEANOUT
PROP. WATER LINE	EXIST. GUY WIRE		PROP. SANITARY CLEANOUT
EXIST. SANITARY SEWER LINE	EXIST. LIGHT POLE		
	EXIST. BUILDING LIGHT		
PROP. SANITARY SEWER LINE	EXIST. SHOE BOX LIGHT		PROP. AREA LIGHT
	EXIST. COBRA LIGHT POLE		PROP. OUTLET CONTROL STRUCTURE
EXIST. STORM DRAIN LINE			PROP. DRAINAGE MANHOLE
PROP. STORM DRAIN LINE	EXIST. TRAFFIC SIGNAL POLE		
EXIST. MINOR CONTOUR & ELEVATION	EXIST. MANHOLE		PROP. SANITARY SEWER MANHOLE
EXIST. MAJOR CONTOUR & ELEVATION	EXIST. "A" INLET		PROP. "A" INLET
	EXIST. "B" INLET		PROP. "B" INLET
PROP. FINISH GRADE CONTOUR & ELEVATION	EXIST. "E" INLET		PROP. "E" INLET
EXIST. MONITORING WELL	EXIST. YARD INLET		PROP. YARD INLET
APPROX. TEST PIT LOCATION	EXIST. FLARED END SECTION		PROP. FLARED END SECTION
	EXIST. HEADWALL		PROP. HEADWALL

GRADING NOTES

1. SITE GRADING SHALL BE PERFORMED IN ACCORDANCE WITH THESE PLANS AND SPECIFICATIONS AND THE RECOMMENDATIONS SET FORTH IN THE SOILS REPORT REFERENCED IN THIS PLAN SET. THE CONTRACTOR SHALL BE RESPONSIBLE FOR REMOVING AND REPLACING ALL SOFT, YIELDING OR UNSUITABLE MATERIALS AND REPLACING WITH SUITABLE MATERIALS AS SPECIFIED IN THE SOILS REPORT. ALL EXCAVATED OR FILLED AREAS SHALL BE COMPACTED TO 95% OF MODIFIED PROCTOR MAXIMUM DENSITY PER A.S.T.M. TEST D-1557. MOISTURE CONTENT AT TIME OF PLACEMENT SHALL NOT EXCEED 2% ABOVE NOR 3% BELOW OPTIMUM. CONTRACTOR SHALL SUBMIT A COMPACTION REPORT PREPARED BY A QUALIFIED SOILS ENGINEER, REGISTERED WITHIN THE STATE WHERE THE WORK IS PERFORMED, VERIFYING THAT ALL FILLED AREAS AND SUBGRADE AREAS WITHIN THE BUILDING PAD AREA AND AREAS TO BE PAVED HAVE BEEN COMPACTED IN ACCORDANCE WITH THESE PLANS AND SPECS AND THE RECOMMENDATIONS SET FORTH IN THE SOILS REPORT.
2. CONTRACTOR IS RESPONSIBLE FOR VERIFICATION OF EXISTING TOPOGRAPHIC INFORMATION AND UTILITY INVERT ELEVATIONS PRIOR TO COMMENCEMENT OF ANY CONSTRUCTION. CONTRACTOR TO ENSURE 0.75% MIN. SLOPE AGAINST ALL ISLAND GUTTERS, CURBS AND 1.0% ON ALL CONCRETE SURFACES, AND 1-1/2% MIN. ON ASPHALT, TO PREVENT PONDING. ANY DISCREPANCIES THAT MAY EFFECT THE PUBLIC SAFETY OR PROJECT COST, MUST BE IDENTIFIED TO THE ENGINEER IN WRITING IMMEDIATELY. PROCEEDING WITH CONSTRUCTION WITH DESIGN DISCREPANCIES IS DONE SO AT THE CONTRACTOR'S OWN RISK.
3. PROPOSED TOP OF CURB ELEVATIONS ARE GENERALLY 6" ABOVE EXISTING LOCAL ASPHALT GRADE UNLESS OTHERWISE NOTED. FIELD ADJUST TO CREATE A MIN. OF 0.75% GUTTER GRADE ALONG CURB FACE. ENGINEER TO APPROVE FINAL CURBING CUT SHEETS PRIOR TO INSTALLATION.
4. SUBBASE MATERIAL FOR SIDEWALKS, CURB, OR ASPHALT SHALL BE FREE OF ORGANICS AND OTHER UNSUITABLE MATERIALS. SHOULD SUBBASE BE DEEMED UNSUITABLE, SUBBASE IS TO BE REMOVED AND FILLED WITH APPROVED FILL MATERIAL COMPACTED TO 95% OPTIMUM DENSITY (AS DETERMINED BY MODIFIED PROCTOR METHOD).
5. REFER TO SITE PLAN FOR ADDITIONAL NOTES.
6. IN CASE OF DISCREPANCIES BETWEEN PLANS, THE SITE PLAN WILL SUPERCEDE IN ALL CASES. CONTRACTOR MUST NOTIFY ENGINEER OF RECORD OF ANY CONFLICT IMMEDIATELY.
7. MAXIMUM CROSS SLOPE OF 2% ON ALL SIDEWALKS.
8. CONTRACTOR TO ENSURE A MAXIMUM OF 2% SLOPE IN ALL DIRECTIONS IN ADA PARKING SPACES AND ADA ACCESS AISLES. CONTRACTOR TO ENSURE A MAXIMUM OF 5% RUNNING SLOPE AND 2% CROSS SLOPE ALONG ALL OTHER PORTIONS OF ACCESSIBLE ROUTE, WITH THE EXCEPTION OF RAMPS AND CURB RAMPS. CONTRACTOR SHALL CLARIFY ANY QUESTIONS CONCERNING CONSTRUCTION IN ADA AREAS WITH THE ENGINEER PRIOR TO THE START OF CONSTRUCTION.
9. THE OWNER SHALL RETAIN DYNAMIC EARTH, LLC (908-879-7095) OR ALTERNATE QUALIFIED GEOTECHNICAL ENGINEER TO TEST SOIL PERMEABILITY AND PROVIDE CONSTRUCTION PHASE INSPECTIONS OF THE BASIN BOTTOM SOILS AND ANY FILL MATERIALS WITHIN ANY PROPOSED INFILTRATION OR RETENTION BASIN TO COMPARE RESULTS TO DESIGN CRITERIA.
10. CONTRACTOR IS TO REMOVE EXISTING UNSUITABLE OR OVERLY COMPACT SOIL OR ROCK AS NEEDED TO ACHIEVE REQUIRED PERMEABILITY AS DIRECTED BY THE OWNERS GEOTECHNICAL ENGINEER, AND NEW FILL, IF NEEDED, SHALL HAVE AN IN PLACE PERMEABILITY GREATER THAN OR EQUAL TO THE DESIGN CRITERIA.
11. CONTRACTOR IS RESPONSIBLE FOR CONTACTING THE OWNER'S GEOTECHNICAL ENGINEER PRIOR TO ONSET OF CONSTRUCTION TO SUBMIT AND CONFIRM THE CONTRACTOR'S PROPOSED MEANS AND MATERIALS AND TO SCHEDULE INSPECTIONS FOR BOTTOM OF BASIN, REMOVAL OF UNSUITABLE SOIL, FILL PLACEMENT, AND FINAL BASIN PERMEABILITY TESTING.
12. THE CONTRACTOR IS RESPONSIBLE FOR AS-BUILT PLANS AND GRADE CONTROL UNLESS DEFINED OTHERWISE ELSEWHERE IN THE CONTRACT DOCUMENTS.

THIS PLAN SET IS FOR PERMITTING PURPOSES ONLY AND MAY NOT BE USED FOR CONSTRUCTION

Rev.	Date	Comments	By
1	03/20/20	REVISED PER COMPLETENESS COMMENTS	JTD

DYNAMIC ENGINEERING
LAND DEVELOPMENT CONSULTING • PERMITTING • GEOTECHNICAL • ENVIRONMENTAL • SURVEY • PLANNING & ZONING
Offices conveniently located in:
Lake Como, New Jersey T: 732.974.0198 | Chester, New Jersey T: 908.879.9229 | Newark, New Jersey T: 973.755.7200 | Toms River, New Jersey T: 732.974.0198
Allen, Texas T: 972.334.2100 | Austin, Texas T:512.646.2646 | Houston, Texas T: 281.789.6400
Newtown, Pennsylvania T: 267.685.0276 | Delray Beach, Florida T: 561.921.8570
245 Main Street - Suite 110
Chester, NJ 07930
T: 908.879.9229
F: 908.879.0222
www.dynamicec.com

TITLE:

GRADING PLAN

PROJECT: **CAPITOL SENIORS HOUSING**
PROPOSED ASSISTED LIVING
BLOCK 2202, LOT 1
620 PASCACK ROAD (CR 502)
TOWNSHIP OT WASHINGTON, BERGEN COUNTY, NEW JERSEY

JOSEPH G. JAWORSKI — PROFESSIONAL ENGINEER — NEW JERSEY LICENSE No. 36618

DANIEL T. SEHNAL — PROFESSIONAL ENGINEER — NEW JERSEY LICENSE No. 53572

811 PROTECT YOURSELF
THE STATE WIDE NOTIFICATION OF EXCAVATORS, DESIGNERS, OR ANY PERSON PREPARING TO DISTURB THE EARTH'S SURFACE ANYWHERE IN ANY STATE
Know what's below. Call before you dig.
FOR STATE SPECIFIC DIRECT PHONE NUMBERS VISIT: WWW.CALL811.COM

JOB No: 1423-99-003	DATE: 01/10/2020
DRAWN BY: DJS	SCALE:(H) 1"=20' (V)
DESIGNED BY: MLR	SHEET No: 6 OF 21
CHECKED BY: DTS	
CHECKED BY: _	Rev. # 1

Plotted: 03/25/20 – 1:42 PM, By: jgoellner, – Product Ver: 23.1s (LMS Tech)
File: P:\DECPC PROJECTS\1423 Capital Seniors Housing\99-003 Washington\Dwg\Site Plans\D142399003XG.dwg, ----> 08 GRADING PLAN

COPYRIGHT © 2020 – DYNAMIC ENGINEERING CONSULTANTS, PC – ALL RIGHTS RESERVED

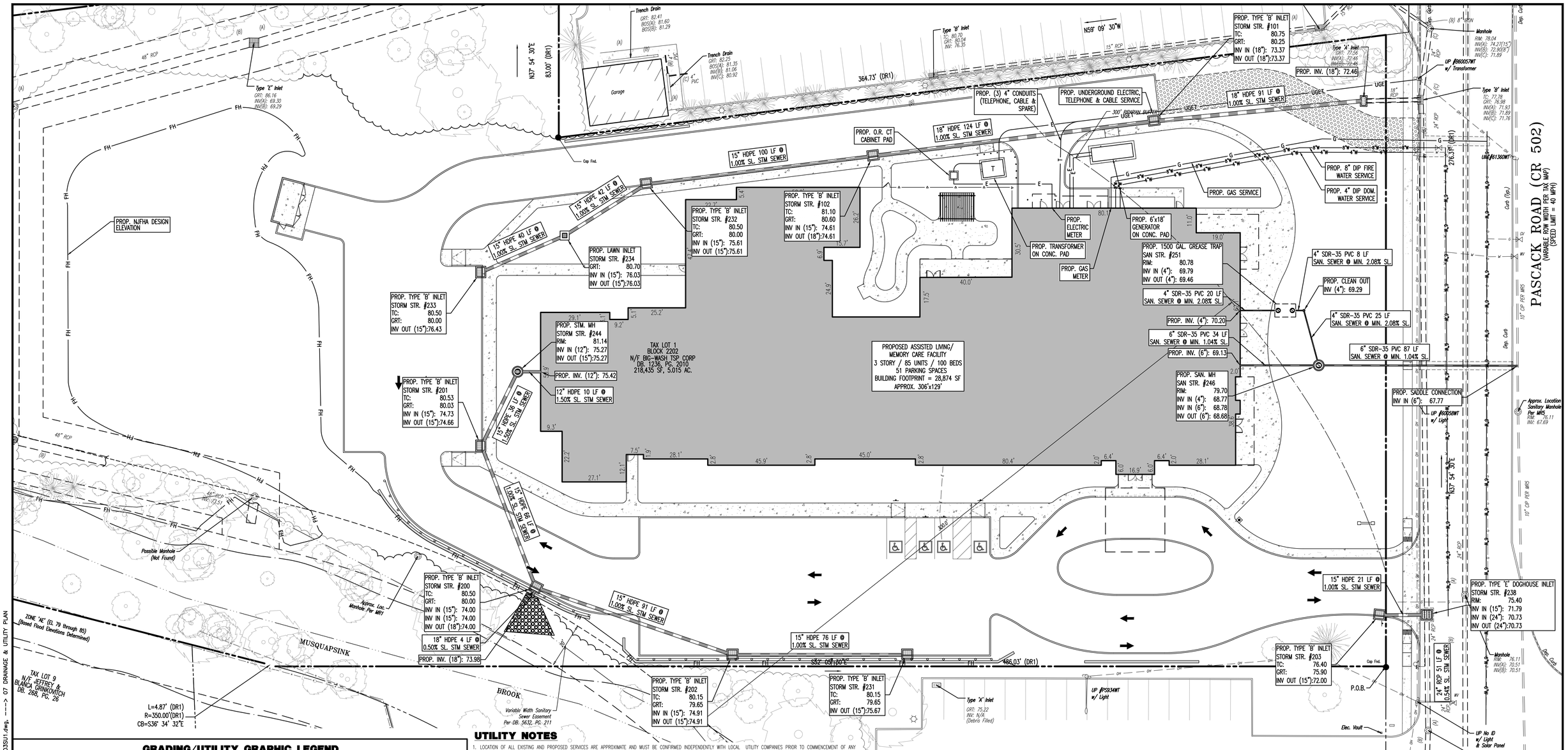

GRADING/UTILITY GRAPHIC LEGEND

PROPERTY LINE (PARCEL IN QUESTION)
OFF-SITE PROPERTY LINES

EXIST. CABLE LINE
PROP. CABLE LINE
EXIST. ELECTRIC LINE
PROP. ELECTRIC LINE
EXIST. FIBER OPTIC LINE
PROP. FIBER OPTIC LINE
EXIST. FUEL LINE
PROP. FUEL LINE
EXIST. OVERHEAD WIRES
PROP. OVERHEAD WIRES
EXIST. TELEPHONE LINE
PROP. TELEPHONE LINE
EXIST. UNDERGROUND ELEC./TELE. SERVICE (NO. & SIZE OF CONDUITS NOT DEFINED)
PROP. UNDERGROUND ELEC./TELE. SERVICE (NO. & SIZE OF CONDUITS NOT DEFINED)
EXIST. WATER LINE
PROP. WATER LINE
EXIST. SANITARY SEWER LINE
PROP. SANITARY SEWER LINE
EXIST. STORM DRAIN LINE
PROP. STORM DRAIN LINE
EXIST. MINOR CONTOUR & ELEVATION
EXIST. MAJOR CONTOUR & ELEVATION
PROP. FINISH GRADE CONTOUR & ELEVATION
EXIST. MONITORING WELL
APPROX. TEST PIT LOCATION

EXIST. SPOT ELEVATIONS
EXIST. GUTTER ELEV.
EXIST. TOP OF CURB ELEV.
EXIST. FINISH FLOOR ELEV.
EXIST. GARAGE FLOOR ELEV.
EXIST. FIRE HYDRANT
EXIST. WATER VALVE
EXIST. GAS VALVE
EXIST. GAS METER
EXIST. ELECTRIC METER
EXIST. ELECTRIC BOX
EXIST. CLEAN OUT
EXIST. WELL
EXIST. WATER SHUT OFF VALVE
EXIST. TELEPHONE BOX
EXIST. CABLE TV BOX
EXIST. UTILITY POLE
EXIST. GUY WIRE
EXIST. LIGHT POLE
EXIST. BUILDING LIGHT
EXIST. SHOE BOX LIGHT
EXIST. COBRA LIGHT POLE
EXIST. TRAFFIC SIGNAL POLE
EXIST. MANHOLE
EXIST. "A" INLET
EXIST. "B" INLET
EXIST. "E" INLET
EXIST. YARD INLET
EXIST. FLARED END SECTION
EXIST. HEADWALL

PROP. GRADE SPOT ELEV.
PROP. TOP OF CURB & FINISHED GRADE ELEV.
PROP. FINISHED FLOOR ELEV.
PROP. TOP OF WALL & FINISHED GRADE @ LOW SIDE OF WALL (ACTUAL BOTTOM OF WALL FOOTING TO BE ESTABLISHED BY WALL DESIGNER)
PROP. TOP OF EXTENDED CURB, (OH) FINISHED GRADE @ HIGH SIDE OF EXTENDED CURB & (G) FINISHED GRADE @ LOW SIDE OF EXTENDED CURB
PROP. DIRECTION OF DRAINAGE FLOW ARROW
PROP. WATER VALVE
PROP. GAS VALVE
PROP. STORM CLEANOUT
PROP. SANITARY CLEANOUT
PROP. AREA LIGHT
PROP. OUTLET CONTROL STRUCTURE
PROP. DRAINAGE MANHOLE
PROP. SANITARY SEWER MANHOLE
PROP. "A" INLET
PROP. "B" INLET
PROP. "E" INLET
PROP. YARD INLET
PROP. FLARED END SECTION
PROP. HEADWALL

UTILITY NOTES

1. LOCATION OF ALL EXISTING AND PROPOSED SERVICES ARE APPROXIMATE AND MUST BE CONFIRMED INDEPENDENTLY WITH LOCAL UTILITY COMPANIES PRIOR TO COMMENCEMENT OF ANY CONSTRUCTION OR EXCAVATION. SANITARY SEWER AND ALL OTHER UTILITY SERVICE CONNECTION POINTS SHALL BE CONFIRMED INDEPENDENTLY BY THE CONTRACTOR IN FIELD PRIOR TO THE COMMENCEMENT OF CONSTRUCTION. ALL DISCREPANCIES SHALL BE REPORTED IMMEDIATELY IN WRITING TO THE ENGINEER. CONSTRUCTION SHALL COMMENCE BEGINNING AT THE LOWEST INVERT (POINT OF CONNECTION) AND PROGRESS UP GRADIENT. INTERFACE POINTS (CROSSINGS) WITH EXISTING UNDERGROUND UTILITIES SHALL BE FIELD VERIFIED BY TEST PIT PRIOR TO COMMENCEMENT OF CONSTRUCTION.
2. IT SHALL BE THE CONTRACTOR'S RESPONSIBILITY TO NOTIFY UTILITY "ONE-CALL" NUMBER 72 HOURS PRIOR TO ANY EXCAVATION ON THIS SITE. CONTRACTOR SHALL ALSO NOTIFY LOCAL WATER & SEWER DEPARTMENTS TO MARK OUT THEIR UTILITIES.
3. REFER TO ARCHITECTURAL DRAWINGS FOR EXACT BUILDING UTILITY CONNECTION LOCATIONS. WHERE CONFLICTS EXIST WITH THESE SITE PLANS, ENGINEER IS TO BE NOTIFIED PRIOR TO CONSTRUCTION TO RESOLVE SAME. SERVICE SIZES TO BE DETERMINED BY ARCHITECT.
4. WATER SERVICE MATERIALS SHALL BE SPECIFIED BY THE LOCAL UTILITY COMPANY. CONTRACTORS PRICE FOR WATER SERVICE SHALL INCLUDE ALL FEES AND APPURTENANCES REQUIRED BY THE UTILITY TO PROVIDE A COMPLETE WORKING SERVICE.
5. ALL WATER MAIN SHALL BE CEMENT-LINED, CLASS 52 DUCTILE IRON PIPE, UNLESS OTHERWISE DESIGNATED.
6. THE MINIMUM DIAMETER FOR DOMESTIC WATER SERVICES SHALL BE 1 INCH.
7. SEWER MAINS SHALL BE SEPARATED FROM WATER MAINS BY A DISTANCE OF AT LEAST 10 FEET HORIZONTALLY. WHERE THIS IS NOT POSSIBLE, THE PIPES SHALL BE IN SEPARATE TRENCHES WITH THE SEWER MAIN AT LEAST 18 INCHES BELOW THE WATER MAIN. ALL SEWER MAINS SHALL BE SDR-35 PVC PIPE UNLESS OTHERWISE DESIGNATED.
8. ALL SEWER PIPE INSTALLED WITH LESS THAN 3 FEET OF COVER, GREATER THAN 20 FEET OF COVER OR WITHIN 18 INCHES OF A WATER MAIN SHALL BE CONSTRUCTED OF DUCTILE IRON PIPE. ALL DUCTILE IRON SEWER PIPE SHALL BE CEMENT-LINED, CLASS 52 PIPE, FURNISHED WITH SEWER COAT, OR APPROVED EQUAL.
9. WHERE SANITARY SEWER LATERALS ARE GREATER THAN 10' DEEP AT CONNECTION TO THE SEWER MAIN, CONCRETE DEEP LATERAL CONNECTIONS ARE TO BE UTILIZED.
10. LOCATION & LAYOUT OF GAS, ELECTRIC & TELECOMMUNICATION UTILITY LINES AND SERVICES SHOWN ON THESE PLANS ARE SCHEMATIC IN NATURE. ACTUAL LOCATION & LAYOUT OF THESE UTILITIES & SERVICES ARE TO BE PER THE APPROPRIATE UTILITY PROVIDER.
11. ROOF LEADER COLLECTION PIPING ARE CONCEPTUAL IN NATURE AND ARE NOT FOR CONSTRUCTION. ACTUAL ROOF LEADER COLLECTION PIPING IS TO BE COORDINATED W/ ARCHITECTURAL PLANS FOR EACH INDIVIDUAL BUILDING. ALL ROOF LEADER COLLECTION PIPING SHALL BE SCHEDULE 40 PVC UNLESS OTHERWISE DESIGNATED.
12. ALL SEWER AND WATER FACILITIES SHALL BE CONSTRUCTED IN ACCORDANCE WITH THE REGULATORY AUTHORITY'S RULES AND REGULATIONS.
13. ALL PROPOSED UTILITIES TO BE INSTALLED UNDERGROUND UNLESS OTHERWISE NOTED.
14. MANUFACTURED REINFORCED CONCRETE STORM PIPE TO CONFORM TO ASTM C-76, CLASS III, UNLESS OTHERWISE DESIGNATED. MANUFACTURED REINFORCED CONCRETE ELLIPTICAL STORM PIPE TO CONFORM TO ASTM C-507, CLASS HE-III, UNLESS OTHERWISE DESIGNATED. REINFORCED CONCRETE STORMWATER PIPE TO BE INSTALLED IN ACCORDANCE WITH AMERICAN CONCRETE PIPE ASSOCIATION INSTALLATION GUIDELINES AND MORTAR OR PREFORMED FLEXIBLE JOINT SEALANTS IN ACCORDANCE WITH ASTM C 990 TO BE UTILIZED TO PROVIDE A SILT-TIGHT JOINT. WHERE SPECIFICALLY INDICATED, REINFORCED CONCRETE STORM PIPE JOINTS SHALL BE WATERTIGHT AND CONFORM TO ASTM C-443.
15. HDPE DRAINAGE PIPE SHALL HAVE A SMOOTH WALL INTERIOR WITH ANNULAR EXTERIOR CORRUGATIONS AND CONFORM TO ASTM F2306. SOLID PIPE SHALL HAVE GASKETED WATER-TIGHT JOINTS MEETING THE REQUIREMENTS OF ASTM F2306 AND ASTM D3212. PERFORATED PIPE SHALL HAVE GASKETED SILT-TIGHT JOINTS MEETING THE REQUIREMENTS OF ASTM F2306 AND ASTM F477. HDPE PIPE SHALL BE FROM A MANUFACTURER WHO IS AN EASTERN STATES CONSORTIUM (ESC) QUALIFIED MANUFACTURER OF HDPE PIPE AND INSTALLED IN ACCORDANCE WITH PIPE MANUFACTURE RECOMMENDATIONS.
16. HP DRAINAGE PIPE SHALL HAVE A SMOOTH WALL INTERIOR WITH ANNULAR EXTERIOR CORRUGATIONS AND CONFORM TO ASTM F2736 (12"-30" PIPE) AND ASTM F2881 (36"-60" PIPE). PIPE SHALL HAVE GASKETED WATER-TIGHT JOINTS MEETING THE REQUIREMENTS OF ASTM D3212 AND ASTM F477. FIELD WATERTIGHTNESS PERFORMANCE VERIFICATION MAY BE ACCOMPLISHED IN ACCORDANCE WITH ASTM F2487. HP PIPE SHALL BE FROM A MANUFACTURER WHO IS AN EASTERN STATES CONSORTIUM (ESC) QUALIFIED MANUFACTURER OF HP STORM PIPE AND INSTALLED IN ACCORDANCE WITH PIPE MANUFACTURER RECOMMENDATIONS.
17. PIPE LENGTHS ON THIS PLAN HAVE BEEN MEASURED AS THE DISTANCE BETWEEN THE CENTER POINT OF THE 2 CONNECTED STRUCTURES. ACTUAL PHYSICAL PIPE LENGTH FOR INSTALLATION IS EXPECTED TO BE LESS AND SHOULD BE ACCOUNTED FOR BY THE CONTRACTOR ACCORDINGLY.

GRAPHIC SCALE
-20 0 10 20 40 80
(IN FEET)
1 INCH = 20 FT.

Rev.	Date	Comments	By
1	03/20/20	REVISED PER COMPLETENESS COMMENTS	JTG

THIS PLAN SET IS FOR PERMITTING PURPOSES ONLY AND MAY NOT BE USED FOR CONSTRUCTION

DYNAMIC ENGINEERING
LAND DEVELOPMENT CONSULTING • PERMITTING • GEOTECHNICAL • ENVIRONMENTAL • SURVEY • PLANNING & ZONING
Offices conveniently located in:
Lake Como, New Jersey T: 732.974.0198 | Chester, New Jersey T: 908.879.9229 | Newark, New Jersey T: 973.755.7200 | Toms River, New Jersey T: 732.974.0198
Allen, Texas T: 972.334.2100 | Austin, Texas T:512.446.2646 | Houston, Texas T: 281.789.6400
Newtown, Pennsylvania T: 267.685.0276 | Delray Beach, Florida T: 561.921.8570
245 Main Street - Suite 110
Chester, NJ 07930
T: 908.879.9229
F: 908.879.0222
www.dynamicec.com

TITLE:

DRAINAGE & UTILITY PLAN

PROJECT: **CAPITOL SENIORS HOUSING**
PROPOSED SENIOR HOUSING DEVELOPMENT
BLOCK 2202, LOT 1
620 PASCACK ROAD (CR 502)
TOWNSHIP OT WASHINGTON, BERGEN COUNTY, NEW JERSEY

JOB No: 1423-99-003
DATE: 01/10/2020
DRAWN BY: DJS
SCALE: (H) 1"=20' (V)
DESIGNED BY: MLR
CHECKED BY: DTS
CHECKED BY: –
SHEET No: 7 OF 21

JOSEPH G. JAWORSKI
PROFESSIONAL ENGINEER
NEW JERSEY LICENSE No. 36618

DANIEL T. SEHNAL
PROFESSIONAL ENGINEER
NEW JERSEY LICENSE No. 53572

811 PROTECT YOURSELF
ALL STATES REQUIRE NOTIFICATION OF EXCAVATORS, DESIGNERS, OR ANY PERSON PREPARING TO DISTURB THE EARTH'S SURFACE ANYWHERE IN ANY STATE
Know what's below. Call before you dig.
FOR STATE SPECIFIC DIRECT PHONE NUMBERS VISIT: WWW.CALL811.COM

Rev. # 1

Plotted: 03/20/20 – 2:04 PM, By: jpeliner, – Product Ver: 23.1s (LMS Tech)
File: P:\DECPC PROJECTS\1423 Capitol Seniors Housing\99-003 Washington\Dwg\Site Plans\D1423990030SU1.dwg, ---> 07 DRAINAGE & UTILITY PLAN

COPYRIGHT © 2020 – DYNAMIC ENGINEERING CONSULTANTS, PC – ALL RIGHTS RESERVED

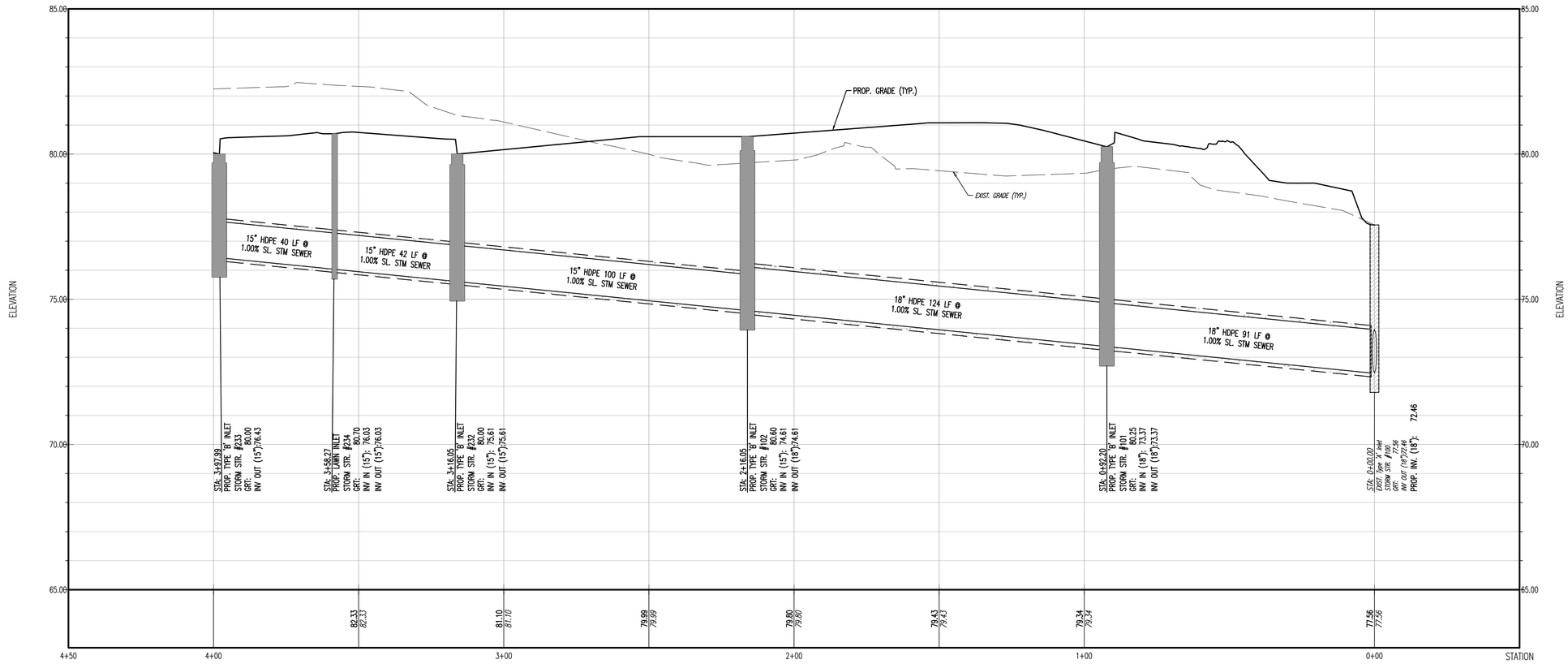

PROFILE VIEW OF STORM STR. – INLET #233 THRU EXIST. 'A' INLET
HORIZONTAL SCALE: 1"=20'
VERTICAL SCALE: 1"=2'

HORIZONTAL SCALE

-20 0 10 20 40 80

(IN FEET)
1 INCH = 20 FT.

VERTICAL SCALE

-2 0 1 2 4 8

(IN FEET)
1 INCH = 2 FT.

THIS PLAN SET IS FOR PERMITTING PURPOSES ONLY AND MAY NOT BE USED FOR CONSTRUCTION

Rev.	Date	Comments	By
1	03/20/20	REVISED PER COMPLETENESS COMMENTS	JTG

DYNAMIC ENGINEERING
LAND DEVELOPMENT CONSULTING • PERMITTING • GEOTECHNICAL • ENVIRONMENTAL • SURVEY • PLANNING & ZONING
Offices conveniently located in:
Lake Como, New Jersey T: 732.974.0198 | Chester, New Jersey T: 908.879.9229 | Newark, New Jersey T: 973.755.7200 | Toms River, New Jersey T: 732.974.0198
Allen, Texas T: 972.534.2100 | Austin, Texas T:512.646.2646 | Houston, Texas T: 281.789.6400
Newtown, Pennsylvania T: 267.685.0276 | Delray Beach, Florida T: 561.921.8570
245 Main Street - Suite 110
Chester, NJ 07930
T: 908.879.9229
F: 908.879.0222
www.dynamicec.com

TITLE:

STORM DRAIN PROFILES

PROJECT: **CAPITOL SENIORS HOUSING**
PROPOSED ASSISTED LIVING
BLOCK 2202, LOT 1
620 PASCACK ROAD (CR 502)
TOWNSHIP OT WASHINGTON, BERGEN COUNTY, NEW JERSEY

JOB No:	1423-99-003
DATE:	01/10/2020
DRAWN BY:	JTG
SCALE:	(H) AS (V) SHOWN
DESIGNED BY:	MLR
CHECKED BY:	DTS
CHECKED BY:	–
SHEET No:	8 OF 21
Rev. #	1

JOSEPH G. JAWORSKI
PROFESSIONAL ENGINEER
NEW JERSEY LICENSE No. 36618

DANIEL T. SEHNAL
PROFESSIONAL ENGINEER
NEW JERSEY LICENSE No. 53572

811 Know what's below. Call before you dig.
PROTECT YOURSELF
ALL STATES REQUIRE NOTIFICATION OF EXCAVATORS, DESIGNERS, OR ANY PERSON THEREBY TO DISTURB THE EARTH'S SURFACE ANYWHERE IN ANY STATE.
FOR STATE SPECIFIC DIRECT PHONE NUMBERS VISIT: WWW.CALL811.COM

Plotted: 03/25/20 – 1:43 PM, By: jpoeliner, – Product Ver: 23.1s (LMS Tech)
File: P:\DECPC PROJECTS\1423 Capitol Seniors Housing\99-003 Washington\Dwg\Site Plans\D142399003SP1.dwg, ---> 08 STORM DRAIN PROFILES

COPYRIGHT © 2020 – DYNAMIC ENGINEERING CONSULTANTS, PC – ALL RIGHTS RESERVED

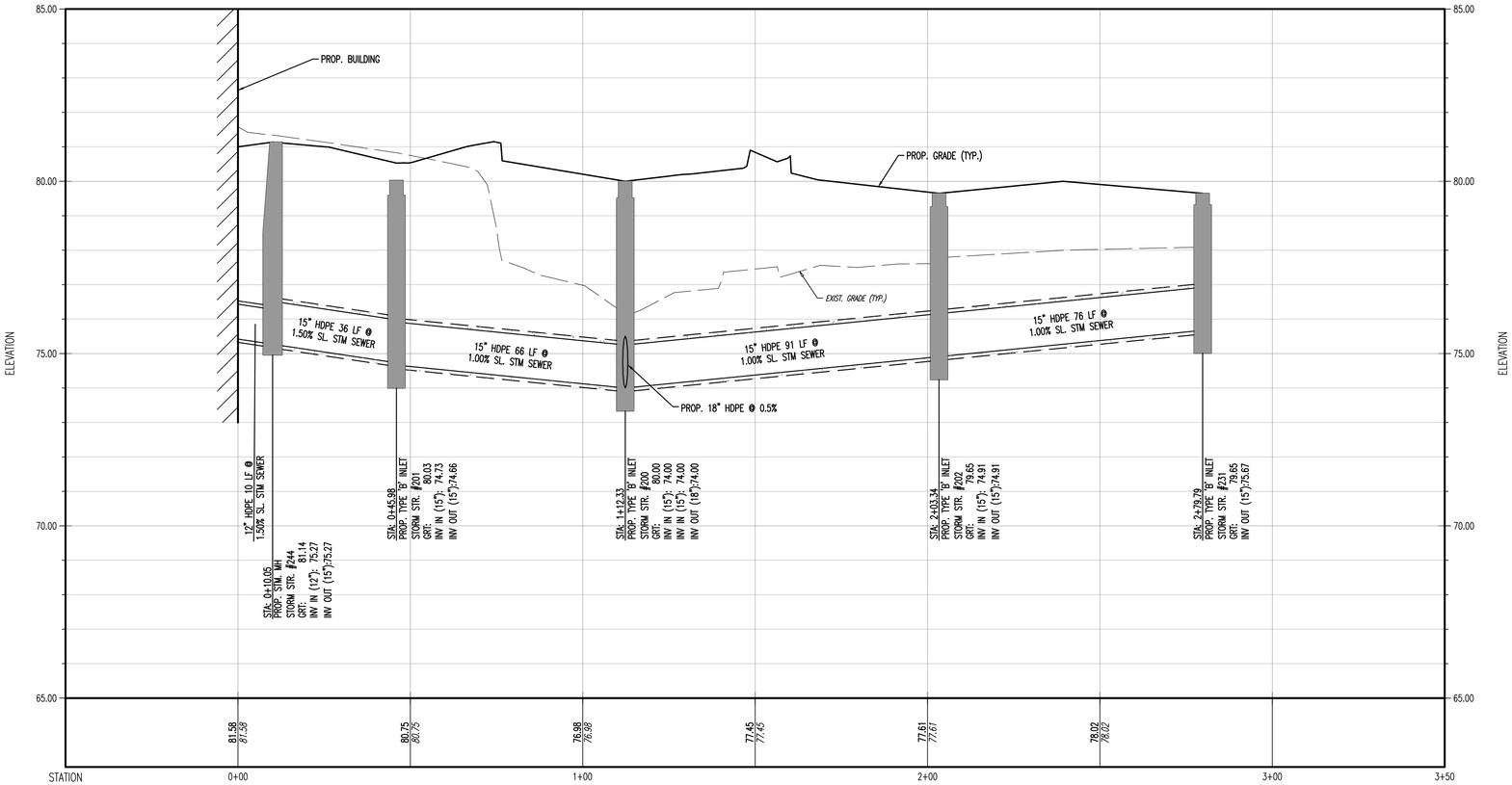

PROFILE VIEW OF STORM STR. – BLDG. THRU INLET #231
HORIZONTAL SCALE: 1"=20'
VERTICAL SCALE: 1"=2'

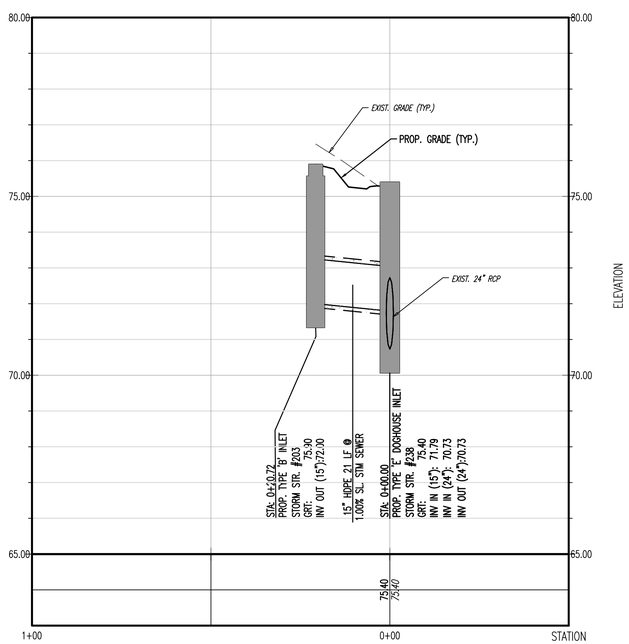

PROFILE VIEW OF STORM STR. – INLET #203 THRU INLET #238
HORIZONTAL SCALE: 1"=20'
VERTICAL SCALE: 1"=2'

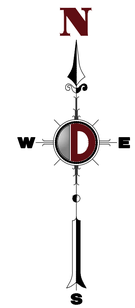

HORIZONTAL SCALE

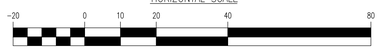

(IN FEET)
1 INCH = 20 FT.

VERTICAL SCALE

(IN FEET)
1 INCH = 2 FT.

THIS PLAN SET IS FOR PERMITTING PURPOSES ONLY AND MAY NOT BE USED FOR CONSTRUCTION

Rev.	Date	Comments	By
1	03/20/20	REVISED PER COMPLETENESS COMMENTS	JTG

DYNAMIC ENGINEERING
LAND DEVELOPMENT CONSULTING • PERMITTING • GEOTECHNICAL • ENVIRONMENTAL • SURVEY • PLANNING & ZONING
Offices conveniently located in:
Lake Como, New Jersey T: 732.974.0198 | Chester, New Jersey T: 908.879.9229 | Newark, New Jersey T: 973.755.7200 | Toms River, New Jersey T: 732.974.0198
Allen, Texas T: 972.534.2100 | Austin, Texas T:512.446.2646 | Houston, Texas T: 281.789.6400
Newtown, Pennsylvania T: 267.685.0276 | Delray Beach, Florida T: 561.921.8570
245 Main Street - Suite 110
Chester, NJ 07930
T: 908.879.9229
F: 908.879.0222
www.dynamicec.com

TITLE:

STORM DRAIN PROFILES

PROJECT: **CAPITOL SENIORS HOUSING**
PROPOSED ASSISTED LIVING
BLOCK 2202, LOT 1
620 PASCACK ROAD (CR 502)
TOWNSHIP OT WASHINGTON, BERGEN COUNTY, NEW JERSEY

JOB No: 1423-99-003	DATE: 01/10/2020
DRAWN BY: JTG	SCALE: (H) AS (V) SHOWN
DESIGNED BY: MLR	SHEET No: 9 OF 21
CHECKED BY: DTS	
CHECKED BY: –	

JOSEPH G. JAWORSKI
PROFESSIONAL ENGINEER
NEW JERSEY LICENSE No. 36618

DANIEL T. SEHNAL
PROFESSIONAL ENGINEER
NEW JERSEY LICENSE No. 53572

811 PROTECT YOURSELF
ALL STATES REQUIRE NOTIFICATION OF EXCAVATIONS, DEGINNERS, OR ANY PERSON THREATENING TO DISTURB THE EARTH'S SURFACE ANYWHERE IN ANY STATE
Know what's below Call before you dig.
FOR STATE SPECIFIC DIRECT PHONE NUMBERS VISIT: WWW.CALL811.COM

Rev. # 1

Plotted: 03/25/20 – 1:43 PM, By: jpoeliner, – Product Ver: 23.1s (LMS Tech)
File: P:\DEGPC PROJECTS\1423 Capitol Seniors Housing\99-003 Washington\Dwg\Site Plans\D1423990035P1.dwg, ---> 09 STORM DRAIN PROFILES

COPYRIGHT © 2020 – DYNAMIC ENGINEERING CONSULTANTS, PC – ALL RIGHTS RESERVED

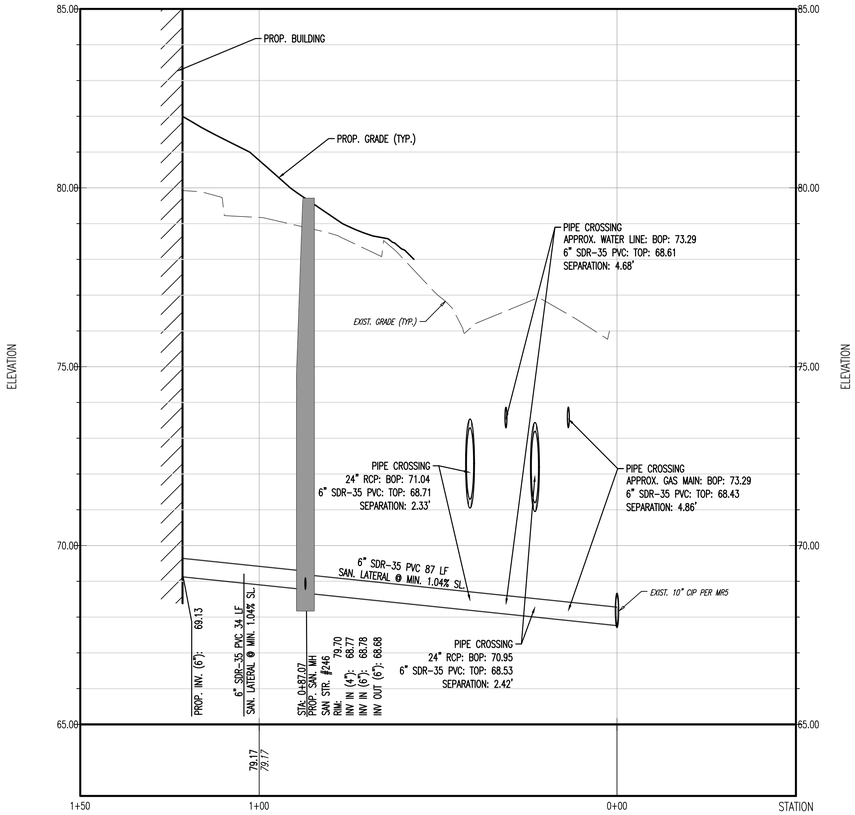

PROFILE VIEW OF SAN STR. – BLDG THRU SADDLE AT EXIST MAIN
HORIZONTAL SCALE: 1"=20'
VERTICAL SCALE: 1"=2'

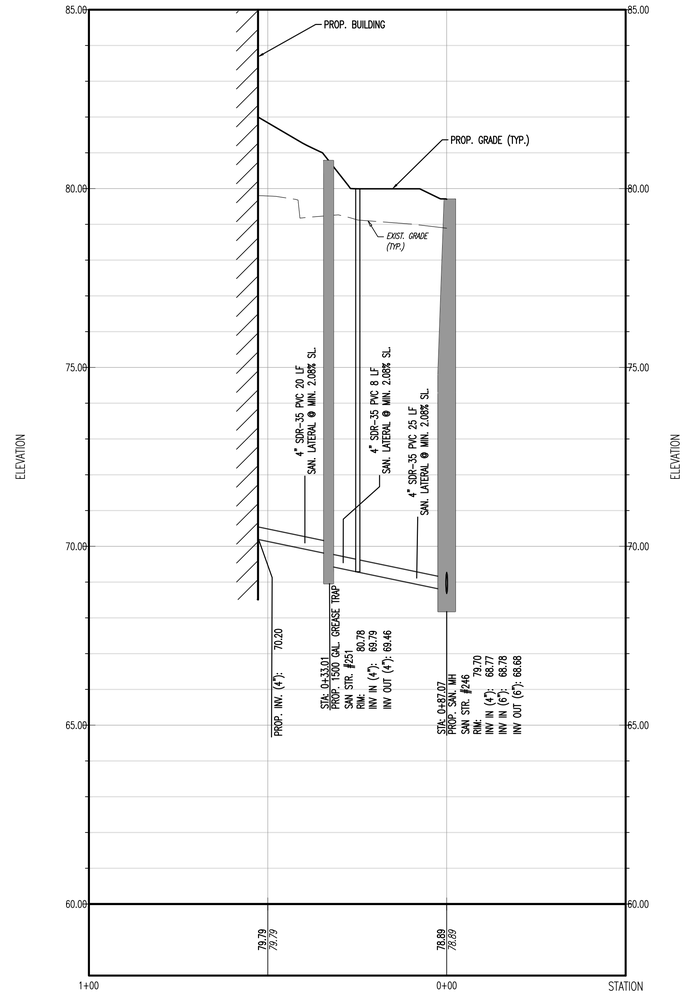

PROFILE VIEW OF SAN STR. – BLDG THRU SAN MH #246
HORIZONTAL SCALE: 1"=20'
VERTICAL SCALE: 1"=2'

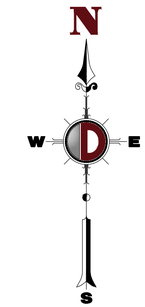

HORIZONTAL SCALE

(IN FEET)
1 INCH = 20 FT.

VERTICAL SCALE

(IN FEET)
1 INCH = 2 FT.

Rev.	Date	Comments	By
1	03/20/20	REVISED PER COMPLETENESS COMMENTS	JTG

THIS PLAN SET IS FOR PERMITTING PURPOSES ONLY AND MAY NOT BE USED FOR CONSTRUCTION

DYNAMIC ENGINEERING
LAND DEVELOPMENT CONSULTING • PERMITTING • GEOTECHNICAL • ENVIRONMENTAL • SURVEY • PLANNING & ZONING
Offices conveniently located in:
Lake Como, New Jersey T: 732.974.0198 | Chester, New Jersey T: 908.879.9229 | Newark, New Jersey T: 973.755.7200 | Toms River, New Jersey T: 732.974.0198
Allen, Texas T: 972.534.2100 | Austin, Texas T:512.646.2646 | Houston, Texas T: 281.789.6400
Newtown, Pennsylvania T: 267.685.0276 | Delray Beach, Florida T: 561.921.8570
245 Main Street - Suite 110
Chester, NJ 07930
T: 908.879.9229
F: 908.879.0222
www.dynamicec.com

TITLE:
SANITARY SEWER PROFILES

PROJECT: **CAPITOL SENIORS HOUSING**
PROPOSED ASSISTED LIVING
BLOCK 2202, LOT 1
620 PASCACK ROAD (CR 502)
TOWNSHIP OT WASHINGTON, BERGEN COUNTY, NEW JERSEY

JOB No: 1423-99-003
DATE: 01/10/2020
DRAWN BY: JTG
SCALE: (H) AS (V) SHOWN
DESIGNED BY: MLR
CHECKED BY: DTS
CHECKED BY: _

JOSEPH G. JAWORSKI
PROFESSIONAL ENGINEER
NEW JERSEY LICENSE No. 36618

DANIEL T. SEHNAL
PROFESSIONAL ENGINEER
NEW JERSEY LICENSE No. 53572

811 PROTECT YOURSELF
ALL STATES REQUIRE NOTIFICATION OF EXCAVATIONS, DEMOLITION, OR OTHER UNDERGROUND DISTURBANCE TO AVOID THE DIRECT SURFACE IMPACTS IN ANY STATE
Dig right below Call before you dig.
FOR STATE SPECIFIC DIRECT PHONE NUMBERS VISIT: WWW.CALL811.COM

SHEET No: 10 OF 21
Rev. # 1

Plotted: 03/25/20 – 1:43 PM, By: jgeslinger, – Product Ver: 23.1s (LMS Tech)
File: P:\DECPC PROJECTS\1423 Capital Seniors Housing\99-003 Washington\Dwg\Site Plans\D1423990035P1.dwg, ---> 10 SANITARY SEWER PROFILES

COPYRIGHT © 2020 – DYNAMIC ENGINEERING CONSULTANTS, PC – ALL RIGHTS RESERVED

THIS PLAN TO BE UTILIZED FOR LIGHTING PURPOSES ONLY

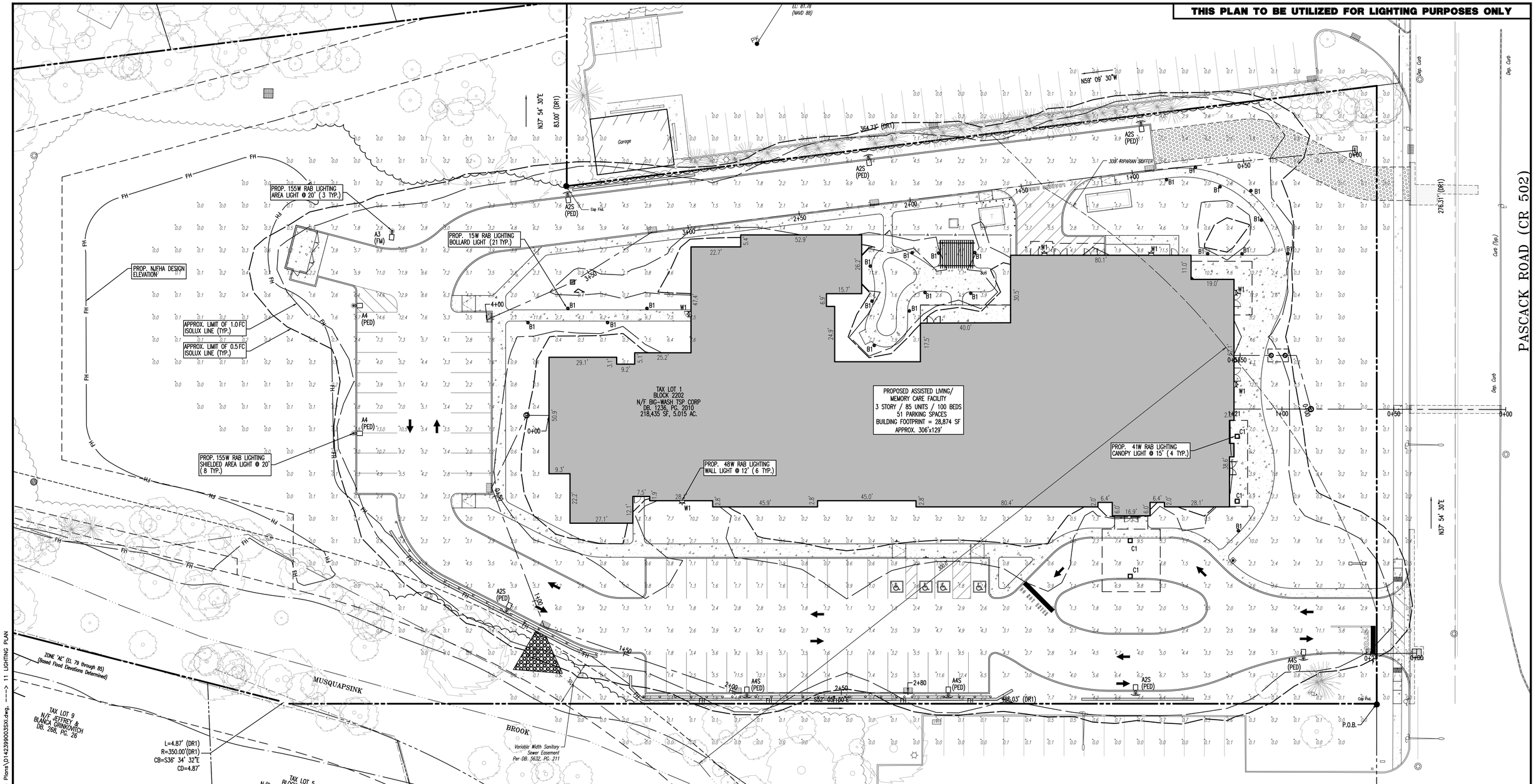

LUMINAIRE SCHEDULE

SYMBOL	QTY	LABEL	ARRANGEMENT	HEIGHT	LLF	DESCRIPTION	FILENAME	LUM. WATTS	LUM. LUMENS
	5	A2S	SINGLE	20'	0.94	RAB LIGHTING ALED 150W LED 5000K TYPE 2 W/ BACK SHEILD	ALED2T150-SS-B - Cool - RAB04107S.IES	155	17469
	1	A3	SINGLE	20'	0.94	RAB LIGHTING ALED 150W LED 5000K TYPE 3	ALED3T150 - Cool - RAB0213O.IES	155	16839
	2	A4	SINGLE	20'	0.94	RAB LIGHTING ALED 150W LED 5000K TYPE 4	ALED4T150 - Cool - RAB0213MOD15050.IES	155	18464
	3	A4S	SINGLE	20'	0.94	RAB LIGHTING ALED 150W LED 5000K TYPE 4 W/ BACK SHIELD	ALED4T150-SS-B - Cool - RAB04100S.IES	155	18453
	22	B1	SINGLE	3.5'	0.94	RAB LIGHTING BLED13W 5000K LED BOLLARD	BLED13 - Cool - ITL82640.IES	15	1197
	4	C1	SINGLE	15'	0.94	RAB LIGHTING VANLED 40W 5000K CANOPY LIGHT	DLF18081O2-4AMODF50.ies	41	5669
	5	W1	SINGLE	12'	0.9	RAB LIGHTING SLIMFC57W LED 4000K WALLPACK	RAB02656MOD40.ies	48	4881

ISO CURVES ARE MAINTAINED AND SHOWN AT 0.5 AND 0.1 FC.

(FM) - FLUSH MOUNT FOUNDATION (PED) - PEDESTAL FOUNDATION

THE CALCULATIONS SHOWN WERE MADE UTILIZING ACCEPTED PROCEDURES OF THE ILLUMINATING ENGINEERING SOCIETY OF NORTH AMERICA. VARIATIONS IN LAMP OUTPUT, BALLAST OUTPUT, LINE VOLTAGE, DIRT DEPRECIATION, AND OTHER FACTORS MAY AFFECT ACTUAL RESULTS. UNLESS OTHERWISE STATED, ALL RESULTS ARE MAINTAINED VALUES, UTILIZING ACCEPTED LIGHT LOSS FACTORS (LLF).

CALCULATION SUMMARY

LABEL	CALCTYPE	UNITS	AVG	MAX	MIN	AVG/MIN	MAX/MIN
PARKING LOT	ILLUMINANCE	Fc	3.9	14.6	0.6	6.5	24.33

LIGHTING NOTES

1. THIS LIGHTING PLAN ILLUSTRATES ILLUMINATION LEVELS CALCULATED FROM LABORATORY DATA TAKEN UNDER CONTROLLED CONDITIONS IN ACCORDANCE WITH ILLUMINATING ENGINEERING SOCIETY OF NORTH AMERICA (IESNA) APPROVED METHODS. ACTUAL SITE ILLUMINATION LEVELS AND PERFORMANCE OF LUMINARIES MAY VARY DUE TO VARIATIONS IN WEATHER, ELECTRICAL VOLTAGE, TOLERANCE IN LAMPS, AND OTHER RELATED VARIABLE FIELD CONDITIONS.
2. ALL EXISTING CONDITIONS LIGHTING LEVELS ARE REPRESENTATIVE OF AN APPROXIMATION UTILIZING LABORATORY DATA FOR SIMILAR FIXTURES AND/OR ACTUAL FIELD MEASUREMENTS TAKEN WITH A LIGHT METER. DUE TO FACTORS SUCH AS FIXTURE MAINTENANCE, EQUIPMENT TOLERANCES, WEATHER CONDITIONS, ETC., ACTUAL LIGHTING LEVELS MAY DIFFER AND THE LIGHTING LEVELS DEPICTED ON THIS PLAN SHOULD BE CONSIDERED AS APPROXIMATE.
3. CONDUITS SHALL BE INSTALLED A MINIMUM OF 2 FEET BEHIND GUIDERAIL POSTS.
4. ALL WIRING METHODS AND EQUIPMENT CONSTRUCTION SHALL CONFORM TO THE CURRENT NATIONAL ELECTRICAL CODE.
5. REFER TO ARCHITECTURAL PLANS FOR LIGHTING DIAGRAM.

N
E
S
W
FIELD MAP #7086

GRAPHIC SCALE

-20 0 10 20 40 80

(IN FEET)
1 INCH = 20 FT.

Rev.	Date	Comments	By
1	03/26/20	REVISED PER COMPLETENESS COMMENTS	JTG

THIS PLAN SET IS FOR PERMITTING PURPOSES ONLY AND MAY NOT BE USED FOR CONSTRUCTION

DYNAMIC ENGINEERING
LAND DEVELOPMENT CONSULTING • PERMITTING • GEOTECHNICAL • ENVIRONMENTAL • SURVEY • PLANNING & ZONING
Offices conveniently located in:
Lake Como, New Jersey T: 732.974.0198 | Chester, New Jersey T: 908.879.9229 | Newark, New Jersey T: 973.755.7200 | Toms River, New Jersey T: 732.974.0198
Allen, Texas T: 972.534.2100 | Austin, Texas T:512.646.2646 | Houston, Texas T: 281.789.6400
Newtown, Pennsylvania T: 267.685.0276 | Delray Beach, Florida T: 561.921.8570
245 Main Street - Suite 110
Chester, NJ 07930
T: 908.879.9229
F: 908.879.0222
www.dynamicec.com

TITLE: LIGHTING PLAN

PROJECT: **CAPITOL SENIORS HOUSING**
PROPOSED ASSISTED LIVING
BLOCK 2202, LOT 1
620 PASCACK ROAD (CR 502)
TOWNSHIP OT WASHINGTON, BERGEN COUNTY, NEW JERSEY

JOB No: 1423-99-003
DATE: 01/10/2020
DRAWN BY: JTG
SCALE: (H) 1"=20' (V)
DESIGNED BY: MLR
CHECKED BY: DTS
CHECKED BY: _
SHEET No: 11 OF 21

JOSEPH G. JAWORSKI
PROFESSIONAL ENGINEER
NEW JERSEY LICENSE No. 36618

DANIEL T. SEHNAL
PROFESSIONAL ENGINEER
NEW JERSEY LICENSE No. 53572

811 PROTECT YOURSELF
ALL STATES REQUIRE NOTIFICATION OF UNDERGROUND UTILITIES 48 HOURS PRIOR PREPARING TO DISTURB THE EARTH'S SURFACE ANYWHERE IN ANY STATE
FOR STATE SPECIFIC DIRECT PHONE NUMBERS VISIT: WWW.CALL811.COM

Rev. # 1

Plotted: 03/25/20 - 1:43 PM, By: jgoellner, - Product Ver: 23.1s (LMS Tech)
File: P:\DECPC PROJECTS\1423 Capitol Seniors Housing\99-003 Washington\Dwg\Site Plans\D142399003SXI.dwg, ---> 11 LIGHTING PLAN

COPYRIGHT © 2020 - DYNAMIC ENGINEERING CONSULTANTS, PC - ALL RIGHTS RESERVED

THIS PLAN TO BE UTILIZED FOR SOIL EROSION & SEDIMENT CONTROL PURPOSES ONLY

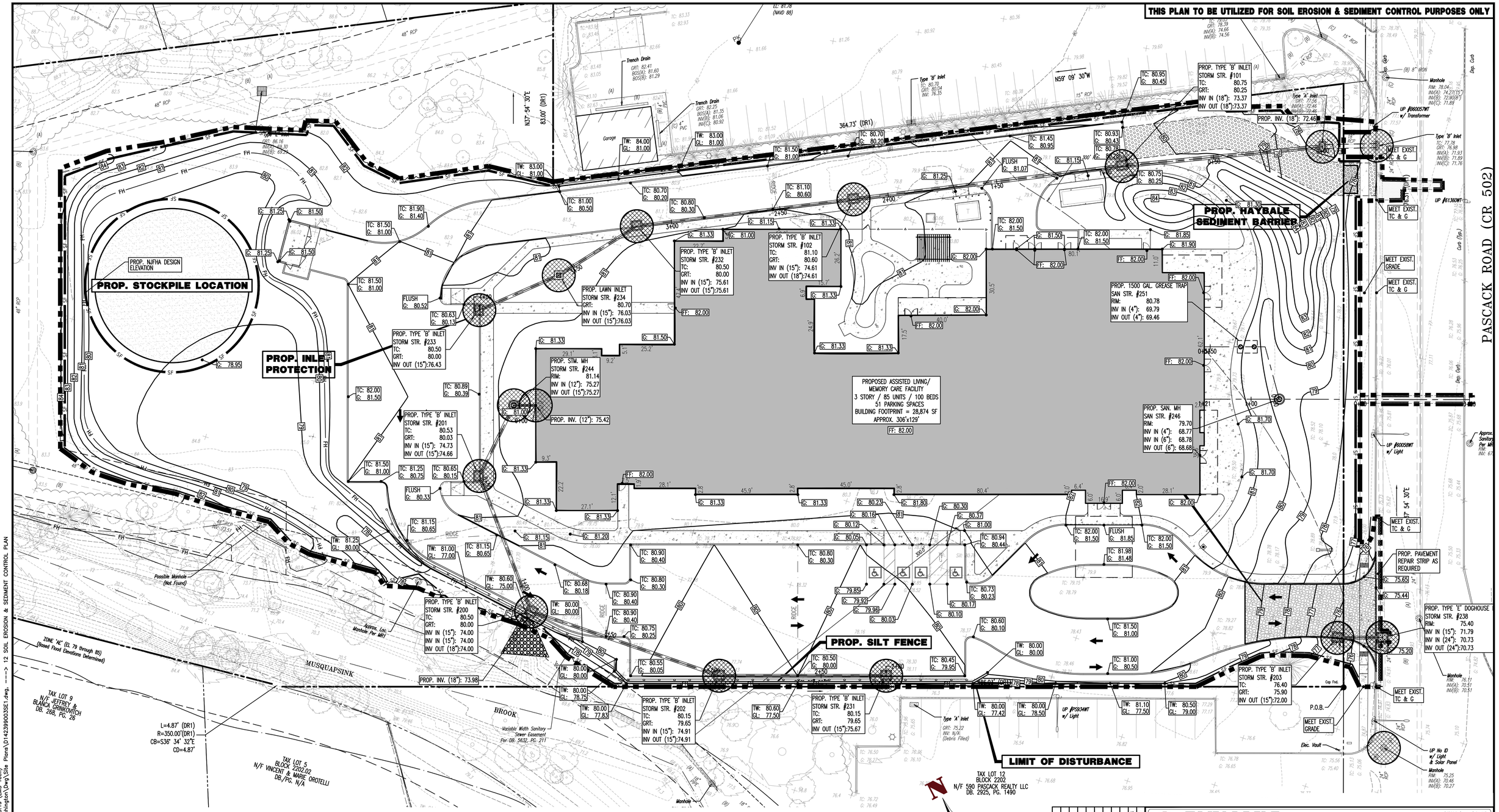

LIMIT OF DISTURBANCE = 134,418 SF. (3.1 Ac.)

SEE SHEET 13 OF 21 FOR SOIL EROSION NOTES

EROSION CONTROL LEGEND

- PROP. LIMIT OF DISTURBANCE LINE
- PROP. SILT FENCE LINE
- PROP. TREE PROTECTION FENCE LINE
- PROP. INLET FILTER
- PROP. HAYBALE SEDIMENT BARRIER

GRAPHIC SCALE

-20 0 10 20 40 80

(IN FEET)
1 INCH = 20 FT.

Rev.	Date	Comments	By
1	03/20/20	REVISED PER COMPLETENESS COMMENTS	JTG

DYNAMIC ENGINEERING
LAND DEVELOPMENT CONSULTING • PERMITTING • GEOTECHNICAL • ENVIRONMENTAL • SURVEY • PLANNING & ZONING
245 Main Street - Suite 110
Chester, NJ 07930
T: 908.879.9229
F: 908.879.0222
www.dynamicec.com
Lake Como, New Jersey T: 732.974.0198 | Chester, New Jersey T: 908.879.9229 | Newark, New Jersey T: 973.755.7200 | Toms River, New Jersey T: 732.974.0198
Allen, Texas T: 972.534.2100 | Austin, Texas T:512.646.2646 | Houston, Texas T: 281.789.6400
Newtown, Pennsylvania T: 267.685.0276 | Delray Beach, Florida T: 561.921.8570
Offices conveniently located in:

TITLE:
SOIL EROSION & SEDIMENT CONTROL PLAN

PROJECT: **CAPITOL SENIORS HOUSING**
PROPOSED ASSISTED LIVING
BLOCK 2202, LOT 1
620 PASCACK ROAD (CR 502)
TOWNSHIP OT WASHINGTON, BERGEN COUNTY, NEW JERSEY

JOB No: 1423-99-003	DATE: 01/10/2020
DRAWN BY: JTG	SCALE:(H) 1"=20' (V)
DESIGNED BY: MLR	SHEET No: 12 OF 21
CHECKED BY: DTS	
CHECKED BY: —	Rev. # 1

JOSEPH G. JAWORSKI
PROFESSIONAL ENGINEER
NEW JERSEY LICENSE No. 36618

DANIEL T. SEHNAL
PROFESSIONAL ENGINEER
NEW JERSEY LICENSE No. 53572

811 PROTECT YOURSELF
THE STATE REQUIRE NOTIFICATION OF EXCAVATORS, DESIGNERS, OR ANY PERSON PREPARING TO DISTURB THE EARTH'S SURFACE ANYWHERE IN ANY STATE
Know what's below Call before you dig.
FOR STATE SPECIFIC DIRECT PHONE NUMBERS VISIT: WWW.CALL811.COM

Plotted: 03/25/20 – 1:44 PM, By: jgoellner, – Product Ver: 23.1s (LMS Tech)
File: P:\DECPC PROJECTS\1423 Capital Seniors Housing\99-003 Washington\Dwg\Site Plans\D142399003SE1.dwg, ---> 12 SOIL EROSION & SEDIMENT CONTROL PLAN

COPYRIGHT © 2020 – DYNAMIC ENGINEERING CONSULTANTS, PC – ALL RIGHTS RESERVED

MUNICIPAL, COUNTY, STATE AND MUA DETAILS TO SUPERCEDE DYNAMIC ENGINEERING DETAILS WHERE APPLICABLE

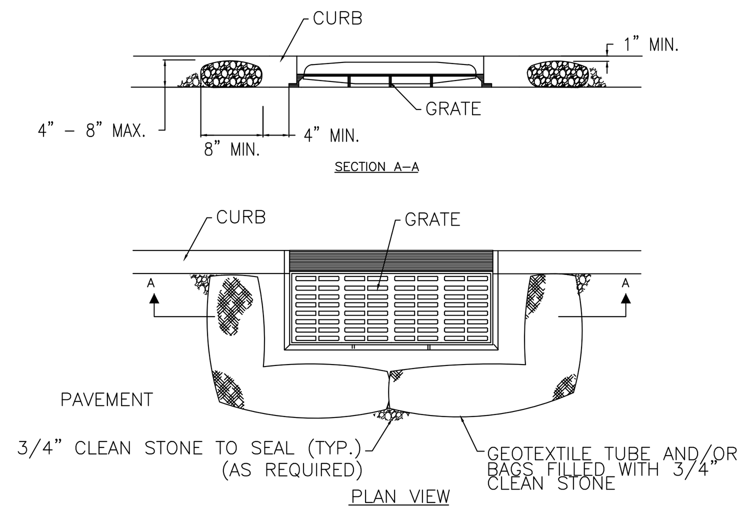

NOTES:

1. GEOTEXTILE TO BE WOVEN POLYPROPYLENE PRODUCT 117F, BY SYNTHETIC INDUSTRIES INC., OR TERRATEX SC, BY WEBTEC INC., OR APPROVED EQUAL.
2. 3/4" CLEAN STONE CORE SHALL BE COMPLETELY CONTAINED WITHIN GEOTEXTILE. SEAMS SHALL BE SEWN OR CLOSED BY SUITABLE MECHANICAL MEANS TO PREVENT LEAKAGE OF STONE.
3. WHERE NO CURB IS PRESENT, BARRIER SHALL COMPLETELY ENCIRCLE THE DRAIN INLET.
4. INLET GRATE OPENING IS TO BE KEPT CLEAR OF OBSTRUCTIONS AT ALL TIMES.
5. THE PROTECTION DEVICE WILL BE DESIGNED TO CAPTURE OR FILTER RUNOFF FROM THE 1 YEAR, 24 HOUR STORM EVENT AND SHALL SAFELY CONVEY HIGHER FLOWS DIRECTLY INTO THE STORM SEWER SYSTEM.
6. OTHER METHODS THAT ACCOMPLISH THE PURPOSE OF STORM SEWER INLET PROTECTION MAY BE USED IF APPROVED BY THE SOIL CONSERVATION DISTRICT.
7. INSPECTIONS SHALL BE FREQUENT. MAINTENANCE, REPAIR, AND REPLACEMENT SHALL BE MADE PROMPTLY, AS NEEDED. THE BARRIER SHALL BE REMOVED WHEN THE AREA DRAINING TOWARDS THE INLET HAS BEEN STABILIZED.

INLET FILTER DETAIL

NOT TO SCALE

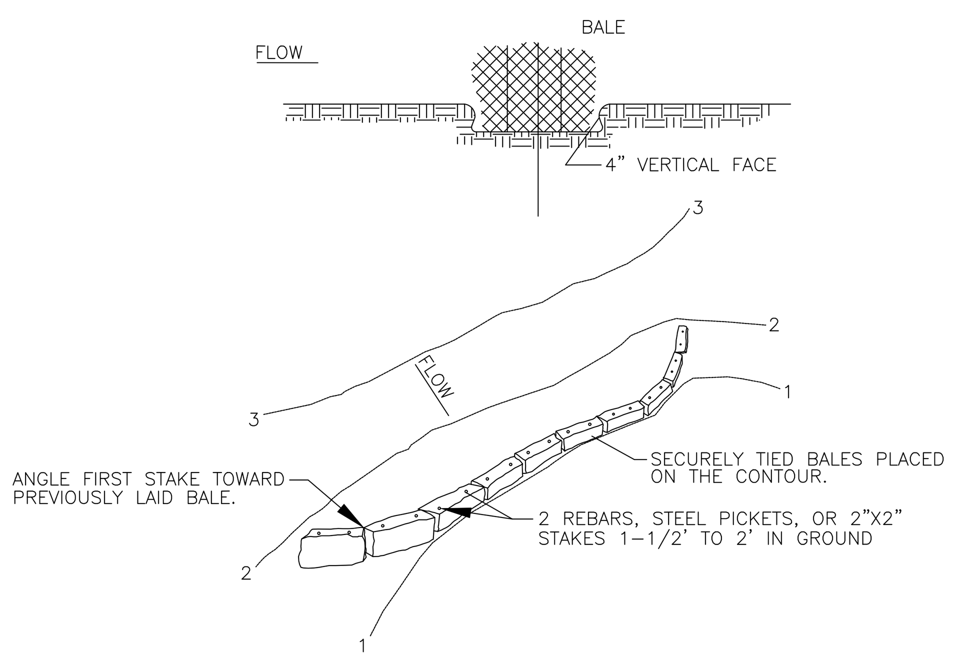

STRAW BALE DIKE DETAIL

NOT TO SCALE

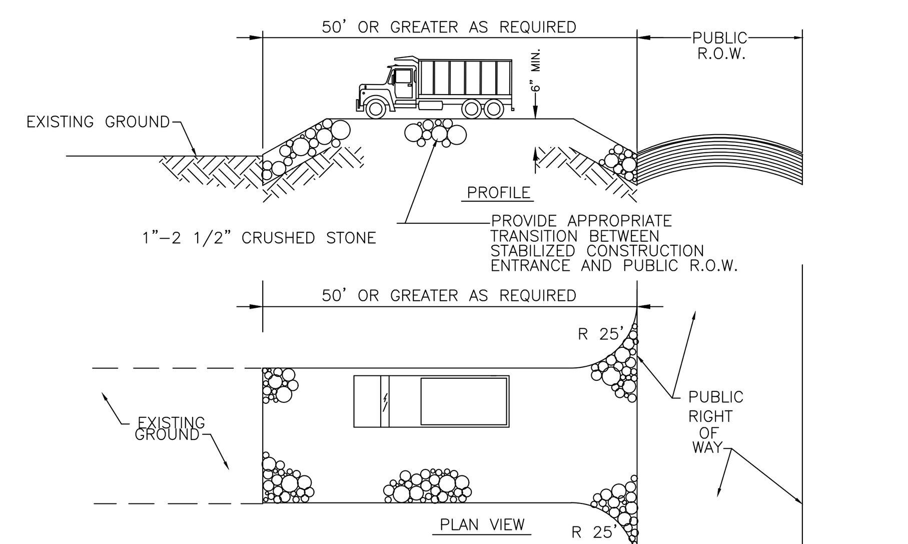

STABILIZED CONSTRUCTION ENTRANCE

NOT TO SCALE

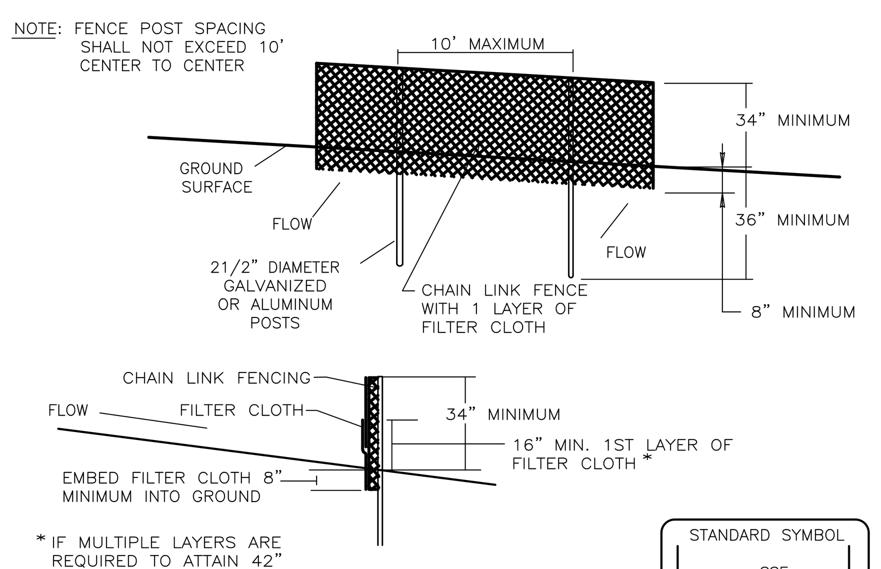

Construction Specifications

1. Fencing shall be 42" in height and constructed in accordance with the latest Maryland State Highway Details for Chain Link Fencing. The specification for a 6' fence shall be used, substituting 42" fabric and 6' length posts.

2. Chain link fence shall be fastened securely to the fence posts with wire ties. The lower tension wire, brace and truss rods, drive anchors and post caps are not required except on the ends of the fence.

3. Filter cloth shall be fastened securely to the chain link fence with ties spaced every 24" at the top and mid section.

4. Filter cloth shall be embedded a minimum of 8" into the ground.

5. When two sections of filter cloth adjoin each other, they shall be overlapped by 6" and folded.

6. Maintenance shall be performed as needed and silt buildups removed when "bulges" develop in the silt fence, or when silt reaches 50% of fence height

7. Filter cloth shall be fastened securely to each fence post with wire ties or staples at top and mid section and shall meet the following requirements for Geotextile Class F:

Tensile Strength	50 lbs/in (min.)	Test: MSMT 509
Tensile Modulus	20 lbs/in (min.)	Test: MSMT 509
Flow Rate	0.3 gal/ft²/minute (max.)	Test: MSMT 322
Filtering Efficiency	75% (min.)	Test: MSMT 322

SUPER SILT FENCE DETAIL

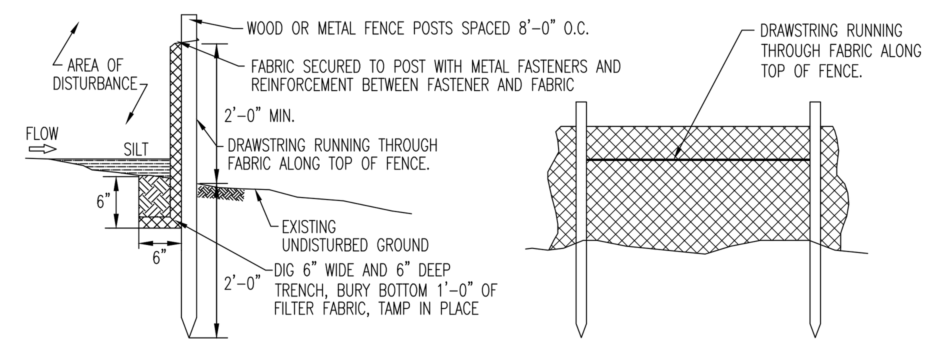

1. PLACE SILT FENCE AT LOCATIONS AS SHOWN ON THE SOIL EROSION AND SEDIMENT CONTROL PLAN.
2. THE SLOPE OF THE LAND FOR AT LEAST 30 FEET ADJACENT TO ANY SILT FENCE SHALL NOT EXCEED 5 PERCENT
3. SILT FENCE SHALL BE INSTALLED SO WATER CANNOT BYPASS THE FENCE AROUND THE SIDES.
4. INSPECTION SHALL BE FREQUENT AND REPAIR OR REPLACEMENT SHALL BE MADE AS PROMPTLY AS POSSIBLE.
5. SILT FENCE SHALL REMAIN IN PLACE FOR THE DURATION OF THE PROJECT UNLESS OTHERWISE INSTRUCTED BY THE TOWNSHIP ENGINEER OR SOIL CONSERVATION DISTRICT.
6. THE BARRIER SHALL BE REMOVED WHEN THE CONTRIBUTING DRAINAGE AREA HAS BEEN STABILIZED SO AS NOT TO BLOCK OR IMPEDE STORM FLOW OR DRAINAGE.
7. FENCE POSTS SHALL BE SPACED 8 FEET CENTER-TO-CENTER OR CLOSER. THEY SHALL EXTEND AT LEAST 2 FEET INTO THE GROUND AND EXTEND AT LEAST 2 FEET ABOVE GROUND. POSTS SHALL BE CONSTRUCTED OF HARDWOOD A MIN. DIAMETER THICKNESS OF 1 1/2 INCHES.
8. A METAL FENCE WITH 6 INCH OR SMALLER OPENINGS AND AT LEAST 2 FEET HIGH MAY BE UTILIZED, FASTENED TO THE FENCE POSTS, TO PROVIDE REINFORCEMENT AND SUPPORT TO THE GEOTEXTILE FABRIC WHERE SPACE FOR OTHER PRACTICES IS LIMITED AND HEAVY SEDIMENT LOADING IS EXPECTED.
9. A GEOTEXTILE FABRIC, RECOMMENDED FOR SUCH USE BY THE MANUFACTURER, SHALL BE BURIED AT LEAST 6 INCHES DEEP IN THE GROUND. THE FABRIC SHALL EXTEND AT LEAST 2 FEET ABOVE GROUND. FABRIC MUST BE SECURELY FASTENED TO THE POSTS USING A SYSTEM CONSISTING OF METAL FASTENERS (NAILS OR STAPLES) AND HIGH STRENGTH REINFORCEMENT MATERIAL (NYLON WEBBING, GROMMETS, WASHERS ETC.) PLACED BETWEEN THE FASTENER AND THE GEOTEXTILE FABRIC. THE FASTENING SYSTEM SHALL RESIST TEARING AWAY FROM THE POST. THE FABRIC SHALL INCORPORATE A DRAWSTRING IN THE TOP PORTION OF THE FENCE FOR ADDED STRENGTH.

SILT FENCE DETAIL

NOT TO SCALE

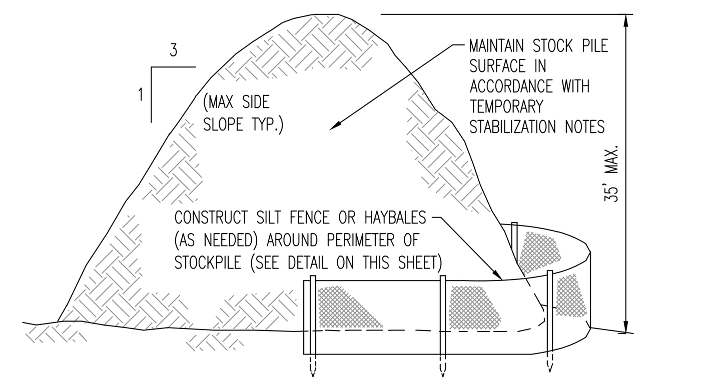

TEMPORARY STOCKPILE DETAIL

NOT TO SCALE

SEQUENCE OF CONSTRUCTION:

PHASE 1: INSTALL STONE ANTI-TRACKING PAD AND OTHER SOIL EROSION SEDIMENT CONTROL MEASURES INCLUDING DOWN SLOPE PERIMETER HAY BALES, SILT FENCE, & TREE PROTECTION FENCING. (2 DAYS)

PHASE 2: DEMOLISH EXISTING BUILDING AND ASSOCIATED LOT IMPROVEMENTS. (1 MONTH)

PHASE 3: CLEAR AND ROUGH GRADE FOR NEW BUILDING SITE AND OTHER STRUCTURES REQUIRING EXCAVATION. (2 MONTHS)

PHASE 4: EXCAVATE AND INSTALL UNDERGROUND PIPING AND DRAINAGE STRUCTURES. INSTALL INLET FILTERS (1 MONTH)

PHASE 5: EXCAVATE FOR BUILDING FOUNDATION. (2 WEEKS)

PHASE 6: COMPLETE BUILDING CONSTRUCTION. (8 MONTHS)

PHASE 7: EXCAVATE AND INSTALL ON SITE IMPROVEMENTS INCLUDING CURBING, ROOF LEADERS, SIDEWALKS AND LIGHT POLE FOUNDATIONS. (1 MONTH)

PHASE 8: FINAL GRADING ON SITE. REMOVE TREE PROTECTION FENCING. (1 WEEK)

PHASE 9: UNIFORMLY APPLY TOPSOIL TO AN AVEAGE DEPTH OF 5", MINIMUM OF 4", FIRMED IN PLACE. (1 WEEK)

PHASE 10: INSTALL PAVING, CONCRETE, AND FINAL VEGETATION INCLUDING SEEDING AND LANDSCAPING. (1 WEEK)

PHASE 11: REMOVE SOIL EROSION AND SEDIMENT CONTROL MEASURES ONCE SITE HAS BEEN STABILIZED.

BERGEN COUNTY SOIL CONSERVATION DISTRICT SOIL EROSION AND SEDIMENT CONTROL NOTES

1. ALL SOIL EROSION AND SEDIMENT CONTROL PRACTICES WILL BE INSTALLED IN ACCORDANCE WITH THE STANDARDS FOR SOIL EROSION AND SEDIMENT CONTROL IN NEW JERSEY (NJ STANDARDS), AND WILL BE INSTALLED IN PROPER SEQUENCE AND MAINTAINED UNTIL PERMANENT STABILIZATION IS ESTABLISHED.
2. ANY DISTURBED AREA THAT WILL BE LEFT EXPOSED FOR MORE THAN THIRTY (30) DAYS AND NOT SUBJECT TO CONSTRUCTION TRAFFIC SHALL IMMEDIATELY RECEIVE A TEMPORARY SEEDING AND MULCHING. IF THE SEASON PROHIBITS TEMPORARY SEEDING, THE DISTURBED AREA WILL BE MULCHED WITH UNROTTED STRAW AT A RATE OF 2 TONS PER ACRE ANCHORED BY APPROVED METHODS (I.E. PEG AND TWINE, MULCH NETTING, OR LIQUID MULCH BINDER).
3. IMMEDIATELY FOLLOWING INITIAL DISTURBANCE OR ROUGH GRADING, ALL CRITICAL AREAS SUBJECT TO EROSION WILL RECEIVE A TEMPORARY SEEDING IN COMBINATION WITH STRAW MULCH OR A SUITABLE EQUIVALENT, AT A RATE OF 2 TONS PER ACRE, ACCORDING TO THE NJ STANDARDS.
4. STABILIZATION SPECIFICATIONS:
   A. TEMPORARY SEEDING AND MULCHING:
      GROUND LIMESTONE – APPLIED UNIFORMLY ACCORDING TO SOIL TEST RECOMMENDATIONS.
         FERTILIZER – APPLY 11LBS. /1,000 SF OF 10-20-10 OR EQUIVALENT WITH 50% WATER INSOLUBLE NITROGEN (UNLESS A SOIL TEST INDICATES OTHERWISE) WORKED INTO THE SOIL A MINIMUM OF 4".
      SEED – PERENNIAL RYEGRASS 100 LBS. /ACRE (2.3 LBS. /1,000 SF) OR OTHER APPROVED SEED; PLANT BETWEEN MARCH 1 AND MAY 15 OR BETWEEN AUGUST 15 AND OCTOBER 1.
         MULCH – UNROTTED STRAW OR HAY AT A RATE OF 70 TO 90 LBS. /1,000 SF APPLIED TO ACHIEVE 95% SOIL SURFACE COVERAGE. MULCH SHALL BE ANCHORED BY APPROVED METHODS (I.E. PEG AND TWINE, MULCH NETTING, OR LIQUID MULCH BINDER).
   B. PERMANENT SEEDING AND MULCHING:
      TOPSOIL – A UNIFORM APPLICATION TO AN AVERAGE DEPTH OF 5", MINIMUM OF 4" FIRMED IN PLACE IS REQUIRED.
      GROUND LIMESTONE – APPLIED UNIFORMLY ACCORDING TO SOIL TEST RECOMMENDATIONS.
         FERTILIZER – APPLY 11 LBS. /1,000 SF OF 10-10-10 OR EQUIVALENT WITH 50% WATER INSOLUBLE NITROGEN (UNLESS A SOIL TEST INDICATES OTHERWISE) WORKED INTO THE SOIL A MINIMUM OF 4".
      SEED – TURF TYPE TALL FESCUE (BLEND OF 3 CULTIVARS) 350 LBS. /ACRE (8 LBS. /1,000 SF) OR OTHER APPROVED SEED; PLANT BETWEEN MARCH 1 AND OCTOBER 1 (SUMMER SEEDING REQUIRES IRRIGATION)
         MULCH – UNROTTED STRAW OR HAY AT A RATE OF 70 TO 90 LBS. /1,000 SF APPLIED TO ACHIEVE 95% SOIL SURFACE COVERAGE. MULCH SHALL BE ANCHORED BY APPROVED METHODS (I.E. PEG AND TWINE, MULCH NETTING, OR LIQUID MULCH BINDER).
5. THE SITE SHALL AT ALL TIMES BE GRADED AND MAINTAINED SUCH THAT ALL STORMWATER RUNOFF IS DIVERTED TO SOIL EROSION AND SEDIMENT CONTROL FACILITIES.
6. SOIL EROSION AND SEDIMENT CONTROL MEASURES WILL BE INSPECTED AND MAINTAINED ON A REGULAR BASIS, INCLUDING AFTER EVERY STORM EVENT.
7. STOCKPILES ARE NOT TO BE LOCATED WITHIN 50' OF A FLOODPLAIN, SLOPE, ROADWAY OR DRAINAGE FACILITY. THE BASE OF ALL STOCKPILES SHALL BE CONTAINED BY A HAYBALE SEDIMENT BARRIER OR SILT FENCE.
8. A CRUSHED STONE, VEHICLE WHEEL-CLEANING BLANKET WILL BE INSTALLED WHEREVER A CONSTRUCTION ACCESS ROAD INTERSECTS ANY PAVED ROADWAY. SAID BLANKET WILL BE COMPOSED OF 1" – 2½" CRUSHED STONE, 6" THICK, WILL BE AT LEAST 30' X 100' AND SHOULD BE UNDERLAIN WITH A SUITABLE SYNTHETIC SEDIMENT FILTER FABRIC AND MAINTAINED.
9. MAXIMUM SIDE SLOPES OF ALL EXPOSED SURFACES SHALL NOT EXCEED 3:1 UNLESS OTHERWISE APPROVED BY THE DISTRICT.
10. DRIVEWAYS MUST BE STABILIZED WITH 1" – 2½" CRUSHED STONE OR SUBBASE PRIOR TO INDIVIDUAL LOT CONSTRUCTION.
11. ALL SOIL WASHED, DROPPED, SPILLED OR TRACKED OUTSIDE THE LIMIT OF DISTURBANCE OR ONTO PUBLIC RIGHT- OF-WAYS, WILL BE REMOVED IMMEDIATELY. PAVED ROADWAYS MUST BE KEPT CLEAN AT ALL TIMES.
12. CATCH BASIN INLETS WILL BE PROTECTED WITH AN INLET FILTER DESIGNED IN ACCORDANCE WITH SECTION 28-1 OF THE NJ STANDARDS.
13. STORM DRAINAGE OUTLETS WILL BE STABILIZED, AS REQUIRED, BEFORE THE DISCHARGE POINTS BECOME OPERATIONAL.
14. DEWATERING OPERATIONS MUST DISCHARGE DIRECTLY INTO A SEDIMENT CONTROL BAG OR OTHER APPROVED FILTER IN ACCORDANCE WITH SECTION 14-1 OF THE NJ STANDARDS.
15. DUST SHALL BE CONTROLLED VIA THE APPLICATION OF WATER, CALCIUM CHLORIDE OR OTHER APPROVED METHOD IN ACCORDANCE WITH SECTION 16-1 OF THE NJ STANDARDS.
16. TREES TO REMAIN AFTER CONSTRUCTION ARE TO BE PROTECTED WITH A SUITABLE FENCE INSTALLED AT THE DRIP LINE OR BEYOND IN ACCORDANCE WITH SECTION 9-1 OF THE NJ STANDARDS.
17. THE PROJECT OWNER SHALL BE RESPONSIBLE FOR ANY EROSION OR SEDIMENTATION THAT MAY OCCUR BELOW STORMWATER OUTFALLS OR OFF-SITE AS A RESULT OF CONSTRUCTION OF THE PROJECT.
18. ANY REVISION TO THE CERTIFIED SOIL EROSION AND SEDIMENT CONTROL PLAN MUST BE SUBMITTED TO THE DISTRICT FOR REVIEW AND APPROVAL PRIOR TO IMPLEMENTATION IN THE FIELD.
19. A COPY OF THE CERTIFIED SOIL EROSION AND SEDIMENT CONTROL PLAN MUST BE AVAILABLE AT THE PROJECT SITE THROUGHOUT CONSTRUCTION.
20. THE BERGEN COUNTY SOIL CONSERVATION DISTRICT MUST BE NOTIFIED, **IN WRITING**, AT LEAST 48 HOURS PRIOR TO ANY LAND DISTURBANCE: BERGEN COUNTY SCD, 700 KINDERKAMACK ROAD, SUITE 106, ORADELL, NJ 07649. TEL: 201-261-4407; FAX 201-261-7573.
21. THE BERGEN COUNTY SOIL CONSERVATION DISTRICT MAY REQUEST ADDITIONAL MEASURES TO MINIMIZE ON OR OFF-SITE EROSION PROBLEMS DURING CONSTRUCTION.
22. THE OWNER MUST OBTAIN A DISTRICT ISSUED REPORT OF COMPLIANCE PRIOR TO THE ISSUANCE OF ANY CERTIFICATE OF OCCUPANCY. **THE DISTRICT REQUIRES AT LEAST ONE WEEK'S NOTICE TO FACILITATE THE SCHEDULING OF ALL REPORT OF COMPLIANCE INSPECTIONS.** ALL SITE WORK MUST BE COMPLETED, INCLUDING TEMPORARY/PERMANENT STABILIZATION OF ALL EXPOSED AREAS, PRIOR TO THE ISSUANCE OF A REPORT OF COMPLIANCE BY THE DISTRICT.

STANDARD FOR DUST CONTROL

DEFINITION – THE CONTROL OF DUST ON CONSTRUCTION SITES AND ROADS.
PURPOSE – TO PREVENT BLOWING AND MOVEMENT OF DUST FROM EXPOSED SOIL SURFACES, REDUCE ON-AND OFF- SITE DAMAGE AND HEALTH HAZARDS, AND IMPROVE TRAFFIC SAFETY.
WHERE APPLICABLE – THE FOLLOWING METHODS SHOULD BE CONSIDERED FOR CONTROLLING DUST:
MULCHES – SEE STANDARDS FOR STABILIZATION WITH MULCHES ONLY
VEGETATIVE COVER – SEE STANDARDS FOR TEMPORARY VEGETATIVE COVER, PERMANENT VEGETATIVE COVER, AND PERMANENT STABILIZATION WITH SOD.
SPRAY-ON ADHESIVES – ON MINERAL SOILS (NOT EFFECTIVE ON MOCK SOILS). KEEP TRAFFIC OFF THESE AREAS.

	WATER DILUTION	TYPE OF NOZZLE	APPLY GALLONS/ACRE
ANIONIC ASPHALT	7:1	COARSE SPRAY	1,200
EMULSION			
LATEX EMULSION	12.5:1	FINE SPRAY	235
RESIN IN WATER	4:1	FINE SPRAY	300

TILLAGE – TO ROUGHEN SURFACE AND BRING CLODS TO THE SURFACE. THIS IS A TEMPORARY EMERGENCY MEASURE WHICH SHOULD BE USED BEFORE SOIL BLOWING STARTS. BEGIN PLOWING ON WINDWARD SIDE OF SITE. CHISEL-TYPE PLOWS SPACED ABOUT 12 INCHES APART, AND SPRING – TOOTHED HARROWS ARE EXAMPLES OF EQUIPMENT WHICH MAY PRODUCE THE DESIRED EFFECT.
SPRINKLING – SITE IS SPRINKLED UNTIL THE SURFACE IS WET.
BARRIERS – SOLID BOARD FENCES, SNOW FENCES, BURLAP FENCES, CRATE WALLS, BALES OF HAY, AND SIMILAR MATERIAL CAN BE USED TO CONTROL AIR CURRENTS AND SOIL BLOWING.
CALCIUM CHLORIDE – SHALL BE IN THE FORM OF LOOSE, DRY GRANULES OR FLAKES FINE ENOUGH TO FEED THROUGH COMMONLY USED SPREADERS AT A RATE THAT WILL KEEP SURFACE MOIST BUT NOT CAUSE POLLUTION OR PLANT DAMAGE. IF USED ON STEEPER SLOPES, THEN USE OTHER PRACTICES TO PREVENT WASHING INTO STREAMS OR ACCUMULATION AROUND PLANTS.
STONE – COVER SURFACE WITH CRUSHED STONE OR COARSE GRAVEL.

SOIL MANAGEMENT NOTE:

ACCORDING TO STATE OF NEW JERSEY LAND USE CLASSIFICATION SYSTEM, THE SITE IS UNDER URBAN REDEVELOPMENT AREA, LAND USE CODE 1,110. THEREFORE, THE PROPOSED PROJECT DOES NOT REQUIRED COMPACTION REMEDIATION, AS PER EXEMPTION #6 UNDER SOIL MANAGEMENT AND PREPARATION STANDARDS FOR SOIL AND SEDIMENT CONTROL IN NEW JERSEY.

Rev.	Date	Comments	By
1	03/20/20	REVISED PER COMPLETENESS COMMENTS	JTG

DYNAMIC ENGINEERING
LAND DEVELOPMENT CONSULTING • PERMITTING • GEOTECHNICAL • ENVIRONMENTAL • SURVEY • PLANNING & ZONING
245 Main Street - Suite 110
Chester, NJ 07930
T: 908.879.9229
F: 908.879.0222
www.dynamicec.com
Offices conveniently located in:
Lake Como, New Jersey T: 732.974.0198 | Chester, New Jersey T: 908.879.9229 | Newark, New Jersey T: 973.755.7200 | Toms River, New Jersey T: 732.974.0198
Allen, Texas T: 972.534.2100 | Austin, Texas T:512.646.2646 | Houston, Texas T: 281.789.6400
Newtown, Pennsylvania T: 267.685.0276 | Delray Beach, Florida T: 561.921.8570

TITLE: SOIL EROSION & SEDIMENT CONTROL DETAILS

PROJECT: **CAPITOL SENIORS HOUSING**
PROPOSED ASSISTED LIVING
BLOCK 2202, LOT 1
620 PASCACK ROAD (CR 502)
TOWNSHIP OT WASHINGTON, BERGEN COUNTY, NEW JERSEY

JOB No:	1423-99-003
DATE:	01/10/2020
DRAWN BY:	LZ
DESIGNED BY:	MLR
CHECKED BY:	DTS
CHECKED BY:	–
SCALE:	(H) AS (V) SHOWN
SHEET No:	13 OF 21
Rev. #	1

JOSEPH G. JAWORSKI
PROFESSIONAL ENGINEER
NEW JERSEY LICENSE No. 36618

DANIEL T. SEHNAL
PROFESSIONAL ENGINEER
NEW JERSEY LICENSE No. 53572

811 Know what's below. Call before you dig. PROTECT YOURSELF
ALL STATES REQUIRE NOTIFICATION OF EXCAVATORS, DESIGNERS, OR ANY PERSON PREPARING TO DISTURB THE EARTH'S SURFACE ANYWHERE IN ANY STATE
FOR STATE SPECIFIC DIRECT PHONE NUMBERS VISIT: WWW.CALL811.COM

Plotted: 03/25/20 – 1:44 PM, By: jgoellner, – Product Ver: 23.1s (LMS Tech)
File: P:\DECPC PROJECTS\1423 Capitol Seniors Housing\99-003 Washington\Dwg\Site Plans\D1423990035E1.dwg, ---> 13 SOIL EROSION & SEDIMENT CONTROL DETAILS

COPYRIGHT © 2020 – DYNAMIC ENGINEERING CONSULTANTS, PC – ALL RIGHTS RESERVED

MUNICIPAL, COUNTY, STATE AND MUA DETAILS TO SUPERCEDE DYNAMIC ENGINEERING DETAILS WHERE APPLICABLE

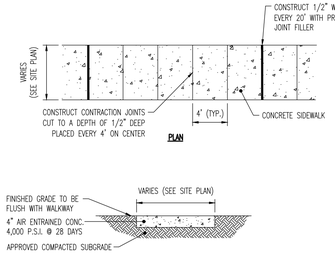

NOTE:

1. MAX. CROSS SLOPE 1/4" PER FOOT PITCHED TOWARDS ROADWAY.
2. PROVIDE 1/2" WIDE PREMOLDED BITUMINOUS EXPANSION JOINT AT 20' INTERVALS.
3. REFER TO SITE PLAN FOR SIDEWALK WIDTH.
4. PROVIDE A BROOM FINISH TO PROVIDE A SLIP RESISTANT WEARING SURFACE IN ACCORDANCE WITH A.D.A. REGULATIONS. FINISH THE EDGES OF THE GROOVES USING AN EDGING TOOL WITH A 1/4" RADIUS.

AS 10/16

SIDEWALK DETAIL

NOT TO SCALE

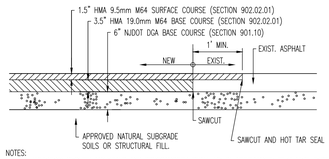

NOTES:

1. ALL PAVEMENT SECTION MATERIALS AND WORKMANSHIP SHALL BE IN ACCORDANCE WITH NEW JERSEY DEPARTMENT OF TRANSPORTATION STANDARD SPECIFICATIONS FOR ROAD AND BRIDGE CONSTRUCTION 2019.
2. OWNER SHALL CONTACT AND ENGAGE DYNAMIC EARTH, LLC. TO INSPECT AND TEST SUBGRADE SOILS. CONTRACTOR SHALL CONTACT DYNAMIC EARTH, LLC. AT (908) 879-7095 (WWW.DYNAMIC-EARTH.COM) AT ONSET OF CONSTRUCTION TO CONFIRM REQUIREMENTS AND COORDINATE INSPECTIONS.
3. SUBGRADE SOILS SHALL BE APPROVED BY DYNAMIC EARTH, LLC. APPROVED NATURAL SOILS SHALL BE COMPACTED AND PROOFROLLED WITH A LOADED TANDEM AXLE TRUCK TO A FIRM AND UNYIELDING CONDITION. UNSUITABLE MATERIALS SHALL BE REMOVED AND REPLACED WITH STRUCTURAL FILL OR STABILIZED AS DIRECTED BY DYNAMIC EARTH, LLC. ANY STRUCTURAL FILL AT OR BELOW PAVEMENT SUBGRADE SHALL BE COMPACTED TO 95% OF THE MAXIMUM DRY DENSITY WITHIN 2% OF THE OPTIMUM MOISTURE CONTENT AS DETERMINED BY ASTM-D1557.
4. **CONTRACTOR TO REFER TO GEOTECHNICAL REPORT FOR FINAL PAVEMENT SECTION DESCRIPTION.**

FULL DEPTH PAVEMENT DETAIL

NOT TO SCALE

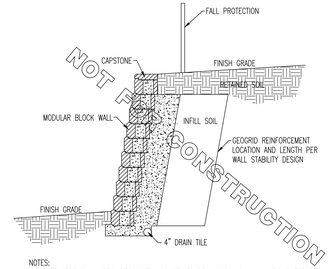

NOTES:

1. CONTRACTOR SHALL PROVIDE SIGNED AND SEALED DRAWINGS AND CALCULATIONS FOR RETAINING WALL DESIGN FOR REVIEW AND APPROVAL BY ENGINEER AND TOWNSHIP BUILDING DEPARTMENT PRIOR TO CONSTRUCTION.
2. WALL SHALL BE CONSTRUCTED IN ACCORDANCE WITH MANUFACTURERS SPECIFICATIONS.

TYPICAL MODULAR BLOCK WALL

NOT TO SCALE

MAKE: BUFFTECH OR APPROVED EQUAL
MODEL: CHESTERFIELD CERTAGRAIN
COLOR: CERTAGRAIN NATURAL CLAY
HEIGHT: 6 FT
SOURCE: WWW.BUFFTECH.COM
POST CAP: NEW ENGLAND

INSTALL AS PER MANUFACTURER'S SPECIFICATIONS

6' VINYL FENCE DETAIL

NOT TO SCALE

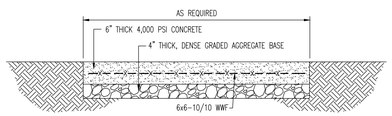

NOTES:

1. CONCRETE SHALL HAVE A MINIMUM COMPRESSIVE STRENGTH OF 4,000 PSI AT 28 DAYS WITH A MINIMUM CEMENT CONTENT OF 600 POUNDS PER CUBIC YARD FOR ALL FOOTINGS.
2. ALL CONCRETE SHALL HAVE A SLUMP OF NO GREATER THAN 4" TO WITHIN A TOLERANCE OF 1".
3. ALL EXPOSED CONCRETE SHALL BE AIR-ENTRAINED, (6% WITHIN 1% TOLERANCE), CONFORMING TO ASTM C260.
4. REINFORCING STEEL BARS SHALL BE A MINIMUM ASTM A615, GRADE 60, AND SHALL BE FIELD WIRED IN PLACE.
5. ALL FRAMEWORK, AND PLACEMENT OF CONCRETE SHALL COMPLY WITH GOOD CONSTRUCTION PRACTICES AND BE IN ACCORDANCE WITH ALL LOCAL GOVERNING CODES AND REGULATIONS, AS WELL AS THE ACI AND UNIFORM BUILDING CODE.
6. EXPANSION JOINTS 1/2" WIDE OF PREMOULDED BITUMINOUS MATERIALS SHALL BE INSTALLED.

CONCRETE PAD DETAIL

NOT TO SCALE

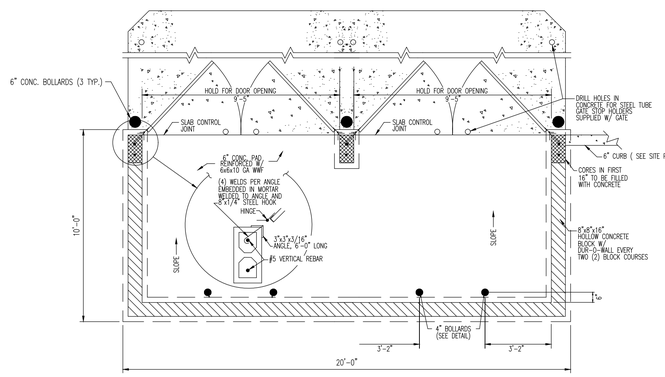

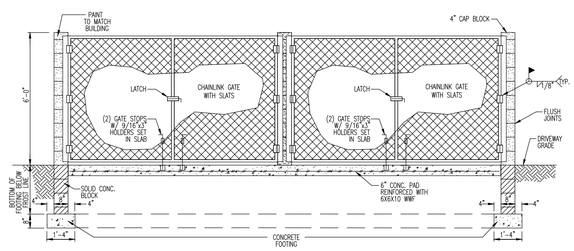

MASONRY TRASH/CHAIN LINK GATE ENCLOSURE DETAIL

NOT TO SCALE

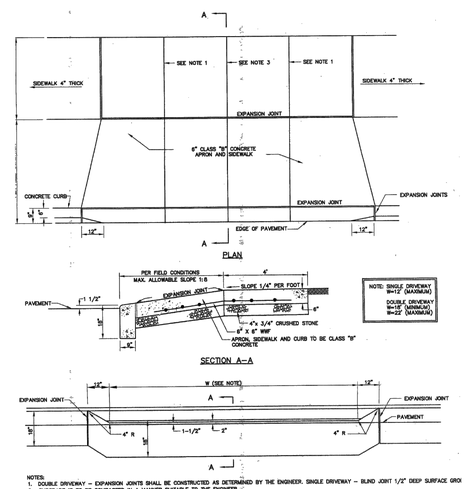

NOTES:

1. DOUBLE DRIVEWAY – EXPANSION JOINTS SHALL BE CONSTRUCTED AS DETERMINED BY THE ENGINEER. SINGLE DRIVEWAY – BLIND JOINT 1/2" DEEP SURFACE GROO
2. SUBGRADE IS TO BE COMPACTED IN A MANNER SUITABLE TO THE ENGINEER.
3. EXPANSION JOINTS ARE TO BE 1/2" WIDE AND FILLED WITH PREFORMED HOT MIX ASPHALT TYPE JOINT FILLER. THE TOP OF ALL JOINT FILLER SHALL BE 1/4" BELOW THE TOP OF THE SURFACE.
4. BLIND JOINTS ARE TO BE SURFACE GROOVE CUT INTO SIDEWALK 1/8" DEEP.
5. ALL CONCRETE SURFACES SHALL BE TREATED WITH A CONCRETE CURING AND SEALING COMPOUND.

BERGEN COUNTY CONCRETE DRIVEWAY 6" THICK

N.T.S.

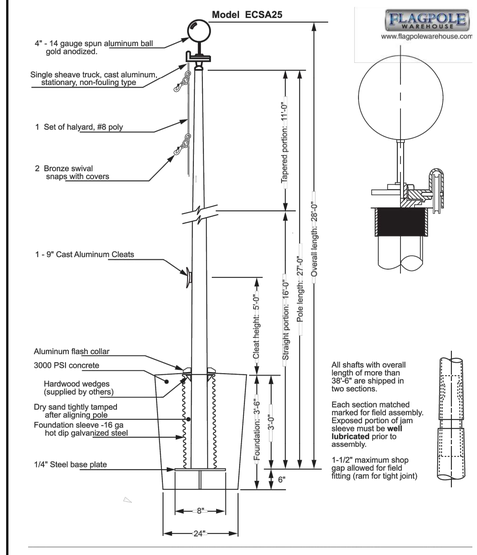

FLAG POLE DETAIL

N.T.S.

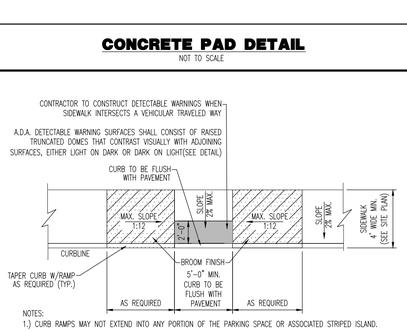

NOTES:

1.) CURB RAMPS MAY NOT EXTEND INTO ANY PORTION OF THE PARKING SPACE OR ASSOCIATED STRIPED ISLAND.

2.) COUNTER SLOPES OF ADJOINING GUTTERS AND PAVEMENT SHALL NOT BE STEEPER THAN 1:20 WITH A MAX. CROSS SLOPE OF 2%.

3. A LEVEL LANDING AREA(MAX. SLOPE 2% IN ANY DIRECTION) SHALL BE PROVIDED AT THE TOP OF THE RAMP. THE LANDING CLEAR LENGTH SHALL BE 36" MIN AND THE CLEAR WIDTH SHALL BE AS WIDE AS THE RAMP.

4.) CURB RAMPS, PAVEMENT MARKINGS & APPLICABLE SIGNAGE SHALL BE CONSTRUCTED IN ACCORDANCE WITH THE LATEST A.D.A. ACCESSIBILITY GUIDELINES.

A.D.A. PARALLEL CURB RAMP DETAIL

NOT TO SCALE

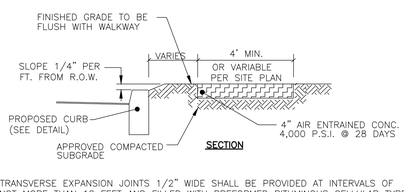

NOTE: TRANSVERSE EXPANSION JOINTS 1/2" WIDE SHALL BE PROVIDED AT INTERVALS OF NOT MORE THAN 12 FEET AND FILLED WITH PREFORMED BITUMINOUS CELLULAR TYPE JOINT FILLER. LONGITUDINAL JOINTS 1/4" WIDE SHALL BE PROVIDED BETWEEN CURBS ABUTTING SIDEWALKS, AND SHALL BE FILLED WITH PREFORMED BITUMINOUS TYPE JOINT FILLER. THE TOP OF ALL JOINT FILLER SHALL BE 1/4" BELOW THE TOP OF THE SIDEWALK

BERGEN COUNTY SIDEWALK DETAIL

NOT TO SCALE

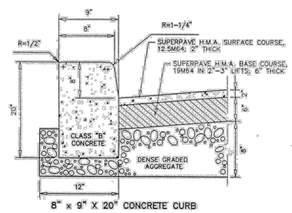

BERGEN COUNTY CURB & PAVEMENT DETAIL

N.T.S.

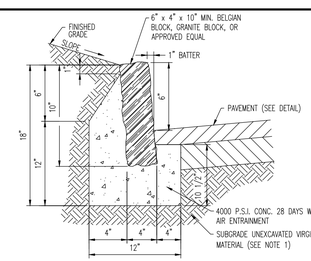

NOTES:

1. ANY EXCAVATION BELOW DESIRED GRADE DUE TO OVER EXCAVATION OR WET SOIL CONDITIONS SHALL BE BACKFILLED WITH 3/4" CLEAN CRUSHED STONE. ALL SUBGRADES SHALL BE APPROVED BY THE TOWNSHIP ENGINEER PRIOR TO POURING.
2. JOINTS SHALL BE NOT MORE THAN 1/4" WIDE FOR DRESSED BLOCK AND 3/8" WIDE FOR QUARRY SPLIT BLOCK. THE JOINTS SHALL BE POINTED WITH 1:1 CEMENT-SAND MORTAR.
3. TRANSVERSE JOINTS 1/2" WIDE SHALL BE INSTALLED IN THE CURB 20'-0" APART AND SHALL BE FILLED WITH PREFORMED, BITUMINOUS-IMPREGNATED FIBER JOINT FILLER, COMPLYING WITH THE REQUIREMENTS OF AASHTO M-213, RECESSED 1/4" FROM THE FRONT FACE AND TOP OF THE CURB.

BELGIAN BLOCK CURB DETAIL

NOT TO SCALE

Rev.	Date	Comments	By
1	03/20/20	REVISED PER COMPLETENESS COMMENTS	JTG

THIS PLAN SET IS FOR PERMITTING PURPOSES ONLY AND MAY NOT BE USED FOR CONSTRUCTION

DYNAMIC ENGINEERING
LAND DEVELOPMENT CONSULTING • PERMITTING • GEOTECHNICAL • ENVIRONMENTAL • SURVEY • PLANNING & ZONING
Offices conveniently located in:
Lake Como, New Jersey T: 732.974.0198 | Chester, New Jersey T: 908.879.9229 | Newark, New Jersey T: 973.755.7200 | Toms River, New Jersey T: 732.974.0198
Allen, Texas T: 972.534.2100 | Austin, Texas T:512.646.2646 | Houston, Texas T: 281.789.6400
Newtown, Pennsylvania T: 267.685.0276 | Delray Beach, Florida T: 561.921.8570
245 Main Street - Suite 110
Chester, NJ 07930
T: 908.879.9229
F: 908.879.0222
www.dynamicec.com

TITLE:

CONSTRUCTION DETAILS

PROJECT: **CAPITOL SENIORS HOUSING**
PROPOSED ASSISTED LIVING
BLOCK 2202, LOT 1
620 PASCACK ROAD (CR 502)
TOWNSHIP OT WASHINGTON, BERGEN COUNTY, NEW JERSEY

JOB No:	1423-99-003
DRAWN BY:	LZ/AOV
DESIGNED BY:	MLR
CHECKED BY:	DTS
CHECKED BY:	–
DATE:	01/10/2020
SCALE:	(H) AS (V) SHOWN
SHEET No:	14 OF 21
Rev. #	1

JOSEPH G. JAWORSKI
PROFESSIONAL ENGINEER
NEW JERSEY LICENSE No. 36618

DANIEL T. SEHNAL
PROFESSIONAL ENGINEER
NEW JERSEY LICENSE No. 53572

811 PROTECT YOURSELF
ALL STATES REQUIRE NOTIFICATION OF EXCAVATORS, DESIGNERS, OR ANY PERSON PREPARING TO DISTURB THE EARTH'S SURFACE. REFERENCE IN ANY STATE.
Know what's below. Call before you dig.
FOR STATE SPECIFIC DIGGER PHONE NUMBERS VISIT: WWW.CALL811.COM

Plotted: 03/25/20 – 1:44 PM, By: jpoeliner, – Product Ver: 23.1s (LMS Tech)
File: P:\DEC\PC PROJECTS\1423 Capitol Seniors Housing\99-003 Washington\Dwg\Site Plans\D14239900SD1.dwg, ----> 14 CONSTRUCTION DETAILS

COPYRIGHT © 2020 – DYNAMIC ENGINEERING CONSULTANTS, PC – ALL RIGHTS RESERVED

MUNICIPAL, COUNTY, STATE AND MUA DETAILS TO SUPERCEDE DYNAMIC ENGINEERING DETAILS WHERE APPLICABLE

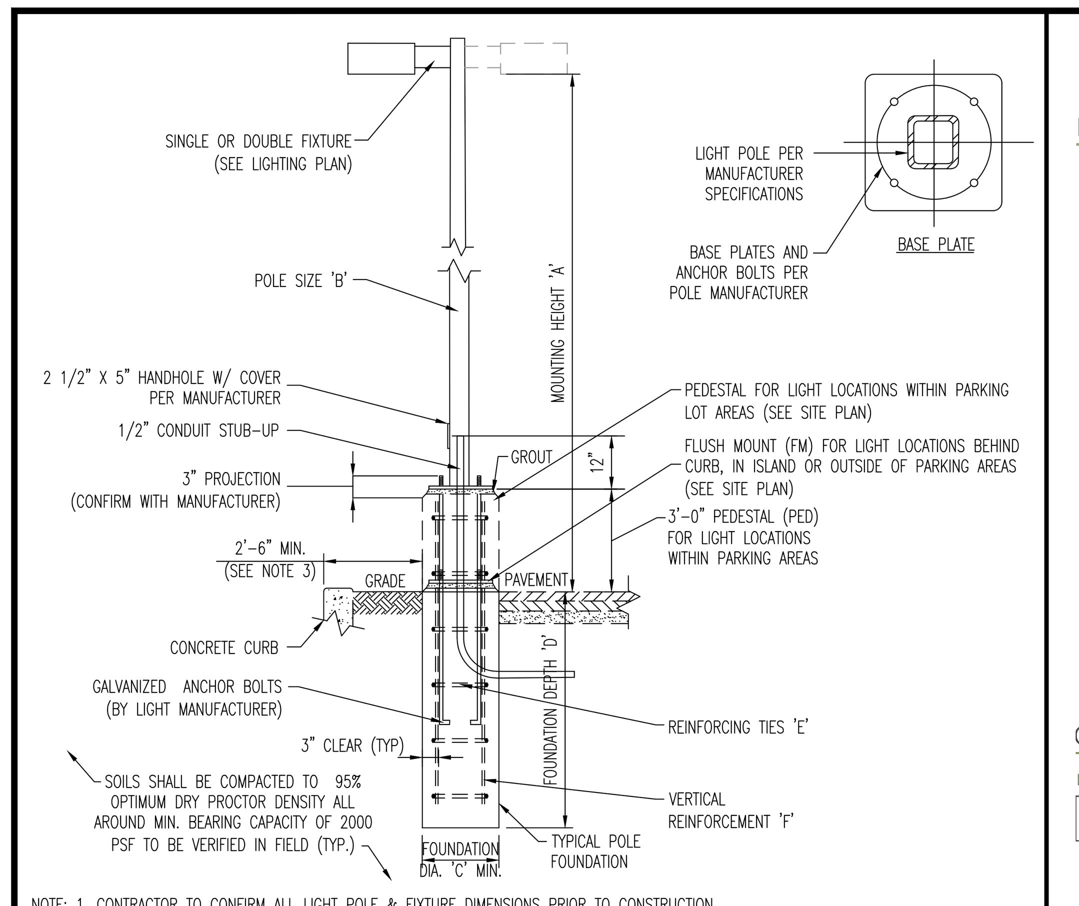

NOTE:
1. CONTRACTOR TO CONFIRM ALL LIGHT POLE & FIXTURE DIMENSIONS PRIOR TO CONSTRUCTION.
2. PROPOSED POLE IN COMBINATION WITH CONCRETE PEDESTAL TO EQUAL MOUNTING HEIGHT 'A'. ACTUAL POLE HEIGHT TO BE ADJUSTED ACCORDINGLY.
3. PROPOSED CONCRETE FOUNDATION AND POLE TO BE CONSTRUCTED WITHIN SUBJECT PROPERTY UNLESS OTHERWISE NOTED. SETBACK FROM CURB IS PREFERRED BUT TO BE ADJUSTED AS NEEDED TO PREVENT ENCROACHMENT OVER PROPERTY LINE.
4. BASE PLATE & ANCHOR BOLTS PER POLE MANUFACTURER. LARGER FOOTING DIAMETER AND/OR ALTERNATE ARANCEMENT OF REINFORCING STEEL MAY BE REQUIRED TO ACCOMMODATE ANCHOR BOLT CONFIGURATION. CONTRACTOR RESPONSIBLE TO COORDINATE DIMENSIONAL REQUIREMENTS FOR BASE PLATE, ANCHOR BOLTS & REINFORCING STEEL PRIOR TO CONSTRUCTION.

LIGHT POLE FOUNDATION SCHEDULE	
MOUNTING HEIGHT ABOVE GRADE 'A'	18'-20'
POLE DIA. 'B'	6" SQUARE (OR PER MANUFACTURER)
# OF FIXTURES	SINGLE OR DOUBLE
FOUNDATION DIAMETER 'C'	18" DIA. ROUND
FOUNDATION DEPTH 'D'	7'
REINFORCING TIES 'E'	#4 @ 12" O.C.
VERTICAL REINFORCEMENT 'F'	(6) #6 BARS EQUALLY SPACED

SOIL NOTES
1. FOOTING DESIGN BASED ON ASSUMED MAXIMUM ALLOWABLE SOILS BEARING CAPACITY OF 2,000 SF PSF. CONTRACTOR RESPONSIBLE TO VERIFY ADEQUACY OF ASSUMED BEARING CAPACITY PRIOR TO CONSTRUCTION. ENGINEER TO BE NOTIFIED IF INCONSISTENCIES EXIST.
2. SUBGRADE TO BE FREE OF ORGANICS AND BE SUITABLE, COMPACTED MATERIAL.

CONCRETE NOTES
1. CONCRETE SHALL HAVE A MINIMUM COMPRESSIVE STRENGTH OF 4,000 PSI AT 28 DAYS WITH A MINIMUM CEMENT CONTENT OF 600 POUNDS PER CUBIC YARD FOR ALL FOOTINGS.
2. ALL CONCRETE SHALL HAVE A SLUMP OF NO GREATER THAN 4" TO WITHIN A TOLERANCE OF 1".
3. ALL EXPOSED CONCRETE SHALL BE AIR-ENTRAINED (WITHIN 1% TOLERANCE), CONFORMING TO ASTM C260.
4. REINFORCING FRAMEWORK AND PLACEMENT OF CONCRETE SHALL COMPLY WITH GOOD CONSTRUCTION PRACTICES AND BE IN ACCORDANCE WITH ALL LOCAL GOVERNING CODES AND REGULATIONS AS WELL AS THE ACI AND UNIFORM BUILDING CODE.

1/6/17 - JGJ

AREA LIGHT FOUNDATION DETAIL

NOT TO SCALE

Dimensions & Weight

POLE MOUNT - Weight: 30 lbs. **EPA:** 0.75

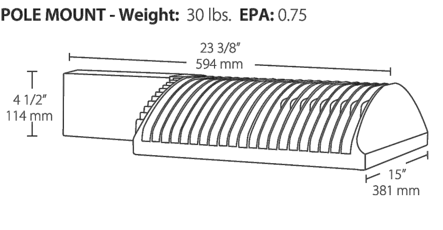

WALLPACK - Weight: 34.8 lbs.

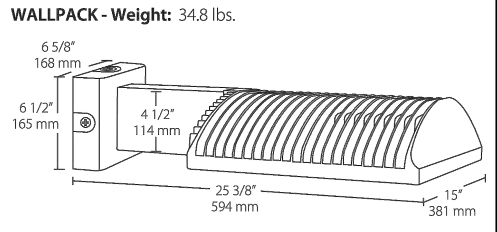

SLIPFITTER - Weight: 32 lbs. **EPA:** 2.2

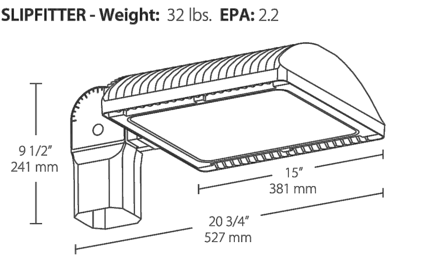

WALLPACK (NO ARM) - Weight: 26 lbs.

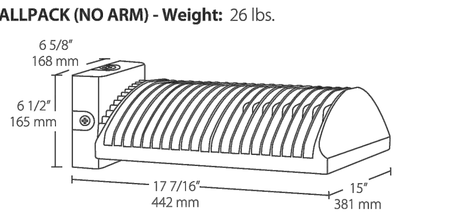

Ordering Information

Product Family	Optics	Wattage	Mounting	Color Temp	Finish Color	Driver Options	Photocell Options
ALED	**2T** Type II **3T** Type III **4T** Type IV	**50** 50W **78** 78W **105** 105W **125** 125W **150** 150W	**Blank** Pole mount **SF** Slipfitter	**Blank** 5000K **N** 4000K **Y** 3000K	**Blank** Bronze **RG** Gray **W** White **K** Black	**/480** 480V **/BL** Bi-Level **/D10** 0 - 10V Dimming	**/PC** 120V* **/PC2** 277V* **/PCT** 120-277V Twistlock* **/PCT4** 480V Twistlock* **/PCS** 120V Swivel **/PCS2** 277V Swivel **/PCS4** 480V Swivel **/WS2** Multi-level motion** sensor (20 ft. mt. ht.) **/WS4** Multi-level motion** sensor (40 ft. mt. ht.)

*Pole mount models only.
**Only available with 0 - 10V dimming models.

Product Family	Optics	Wattage	Color Temp	Mounting	Finish Color	Driver Options	Photocell Options
WPLED	**2T** Type II **3T** Type III **4T** Type IV	**50** 50W **78** 78W **105** 105W **125** 125W **150** 150W	**Blank** 5000K **N** 4000K **Y** 3000K	**Blank** Arm **FX** No Arm	**Blank** Bronze **W** White	**/480** 480V **/BL** Bi-Level **/D10** 0 - 10V Dimming	**/PC** 120V **/PC2** 277V **/PCT** 120-277V Twistlock **/PCT4** 480V Twistlock **/PCS** 120V Swivel **/PCS2** 277V Swivel **/PCS4** 480V Swivel **/WS2** Multi-level motion* sensor (20 ft. mt. ht.) **/WS4** Multi-level motion* sensor (40 ft. mt. ht.)

**Only available with 0 - 10V dimming models.

Please visit rabweb.com to see which products are DLC listed.

RAB Outdoor

AREA LIGHT DETAIL 'A1'

BLED13

RAB

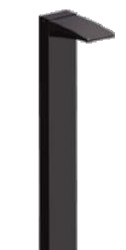

42" high rectangular Bollard with (1) 13 Watt (equivalent to a 150 Watt MH) LED fixture for low level lighting applications. Great for pathway lighting! IESNA Full Cutoff, Fully Shielded optics. 5-year, no-compromise warranty.

Color: Bronze   Weight: 14.8 lbs

Project:	Type:
Prepared By:	Date:

Driver Info		LED Info	
Type	Constant Current	Watts	13.00W
120V	0.13A	Color Temp	5000K (Cool)
208V	0.08A	Color Accuracy	66 CRI
240V	0.07A	L70 Lifespan	100,000
277V	0.06A	Lumens	1,530
Input Watts	15.20W	Efficacy	100.7 LPW
Efficiency	86%		

Technical Specifications

Listings

UL Listed:
Suitable for wet locations

IESNA LM-79 & IESNA LM-80 Testing:
RAB LED luminaires and LED components have been tested by an independent laboratory in accordance with IESNA LM-79 and LM-80.

Dark Sky Conformance:
Conforms to (allows for conformance to) the IDA's fully shielding requirement, emitting no light above 90 degrees (with the exclusion of incidental light reflecting from fixture housing, mounts, and pole).

LED Characteristics

Lifespan:
100,000-hour LED lifespan based on IES LM-80 results and TM-21 calculations

Color Temperature:
5000K

Lumen Maintenance:
The LED will deliver 70% of its initial lumens at 100,000 hours of operation

Color Consistency:
7-step MacAdam Ellipse binning to achieve consistent fixture-to-fixture color

Color Stability:
LED color temperature is warrantied to shift no more than 200K in CCT over a 5-year period

Color Uniformity:
RAB's range of CCT (Correlated Color Temperature) follows the guidelines of the American National Standard for Specifications for the Chromaticity of Solid State Lighting (SSL) Products, ANSI C78.377-2017.

Construction

Junction Box:
Junction Box Not Included

Maximum Ambient Temperature:
Suitable for use in 55°C (131°F)

Cold Weather Starting:
Minimum starting temperature is -40°C (-40°F)

Green Technology:
Mercury and UV free. RoHS-compliant components.

Housing:
Precision die-cast aluminum housing, lens frame

Mounting:
42" Bollard

Gaskets:
High-temperature silicone

Finish:
Formulated for high durability and long-lasting color

Anchor Bolt:
The anchor bolts for the BLED's have the following dimensions 1/2 - 13 x 12 1/4" long with 2 3/4" hook. Available online in pdf file.

Electrical

Driver:
Multi-chip 13W high output long life LED Driver Constant Current, Class 2 100V - 277V, 50/60 Hz

Need help? Tech help line: **(888) 722-1000** Email: **custserv@rablighting.com** Website: **www.rablighting.com**
Copyright © 2020 RAB Lighting All Rights Reserved   Note: Specifications are subject to change at any time without notice

Page 1 of 2

BOLLARD DETAIL 'B1'

SLIM™

- Covers footprint of most traditional wallpacks
- 37W replaces 200W MH; 57W replaces 250W MH; 62W replaces 320W MH
- Easy installation with hinged access, bubble level and multiple conduit entries
- Ultra-high efficiency, up to 115 lm/W
- Available as cutoffs or full cutoffs
- Tight-lock gasket keeps elements out
- 100,000-Hour LED lifespan

Full Cutoff Models Only

IP66 RATING

Dimensions and weight

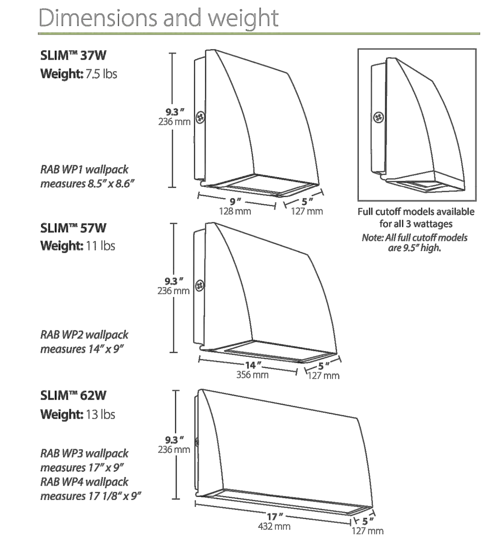

Specifications

UL: Suitable for wet locations. Wall mount only.
LEDs: Long-life, high-efficiency, micro-power, surface mount LEDs; binned and mixed for uniform light output and color.
Lifespan: 100,000-hour LED lifespan based on IES LM-80 results & TM-21 calculations
Drivers: Constant Current, Class 2, 100-277V and 480V, 50/60HZ
37W: : 0.6A,
57W: Constant Current, Class 2, 100-277V and 480V, 50/60Hz, 100-277VAC: 0.8A,
62W: Constant Current, Class 2, 100-277V and 480V, 50/60Hz, 100-277VAC: 0.6A,

5000K Color Temperature	37W	57W	62W
Nominal Watts	37W	57W	62W
Output Lumens (cutoff models)	3905	5579	6395
Lumens per Watt (cutoff models)	111	115	106
Color Accuracy (CRI)	73	73	73
4000K Color Temperature			
Nominal Watts	37W	57W	62W
Output Lumens (cutoff models)	3873	5422	6215
Lumens per Watt (cutoff models)	112	114	106
Color Accuracy (CRI)	73	73	73
3000K Color Temperature			
Nominal Watts	37W	57W	62W
Output Lumens (cutoff models)	3657	4977	6145
Lumens per Watt (cutoff models)	104	100	108
Color Accuracy (CRI)	71	72	72

Bi-Level Operation (Optional): Allows 50% and 100% output modes
Cold Weather Starting: Minimum starting temperature is -40°F / -40°C
Thermal Management: Superior thermal management with internal Air-Flow fins
Housing: Precision die-cast aluminum housing and door frame
Mounting: Die-cast back box with four (4) conduit entry points and knockout pattern for junction box or direct wall mounting. Hinged housing for hands-free installation.
Cutoff Options: Full Cutoff (0°) or Cutoff (10°)
Lens: Microprismatic diffusion lens for smooth and even light distribution
Reflector: Specular thermoplastic
Gaskets: High-temperature silicone
Finish: Our environmentally friendly polyester powder coatings are formulated for high-durability and long-lasting color, and contain no VOC or toxic heavy metals.
Color Stability: LED color temperature warrantied not to shift more than 200K in CCT in 5 years
Color Uniformity: RAB's range of CCT (Correlated Color Temperature) follows the guidelines of the American National Standard for Specifications for the Chromaticity of Solid State Lighting (SSL) Products, ANSI C78.377-2015.
Green Technology: Mercury and UV free, and RoHS compliant. Polyester powder coat finish formulated without the use of VOC or toxic heavy metals.
IESNA LM-79 & LM-80 Testing: RAB LED luminaires have been tested by an independent laboratory in accordance with IESNA LM-79 and LM-80, and have received the Department of Energy "Lighting Facts" label.

Photometrics

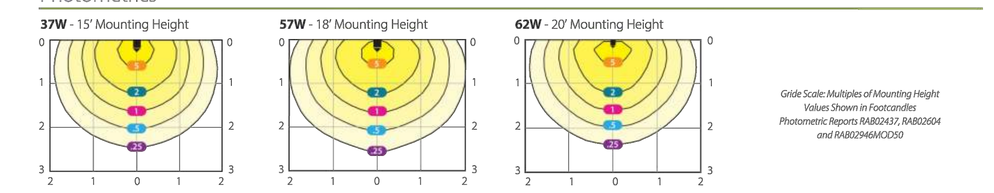

Ordering information

Product Family	Cutoff	Wattage	Color Temp	Finish	Driver Options	Photocell Options
SLIM	**Blank** Cutoff (10°) **FC** Full Cutoff (0°)	**37** 37W **57** 57W **62** 62W	**Blank** 5000K **N** 4000K **Y** 3000K	**Blank** Bronze **W** White	**/BL** Bi-Level **/480** 480V	**/PC** 120V Photocell **/PC2** 277V Photocell **/PCS** 120V Swivel Photocell **/PCS2** 277V Swivel Photocell **/PCS4** 480V Swivel Photocell

WALL LIGHT DETAIL 'W1'

Specifications

UL Listing: Suitable for wet locations
LEDs: Long-life, high-efficiency, surface-mount LEDs
Drivers:
10W: Class 2, Constant Current, 100-277V, 50-60Hz, 120V: 0.30A, 208V: 0.20A, 240V: 0.17A, 277V: 0.15A, 280mA
20W: Class 2, Constant Current, 100-277V, 50-60Hz, 120V: 0.30A, 208V: 0.20A, 240V: 0.17A, 277V: 0.15A, 500mA
40W: Class 2, Constant Current, 100-277V and 480V, 50-60Hz, 120V: 0.60A, 208V: 0.19A, 240V: 0.17A, 277V: 0.14A, 1050mA
52W: Class 2, Constant Current, 100-277V and 480V, 50-60Hz, 120V: 0.80A, 208V: 0.26A, 240V: 0.23A, 277V: 0.20A, 1400mA
65W: Class 2, 100-277V, 50-60Hz, 120V: 0.64A, 208V: 0.40A, 240V: 0.35A, 277V: 0.30A, 1650mA
75W: Class 2, 100-277V, 50-60Hz, 120V: 0.85A, 208V: 0.53A, 240V: 0.46A, 277V: 0.40A, 1980mA
IP Rating: IP66, protected against dust and water ingress

Nominal Watts @120V	10W	20W	40W	52W	65W	75W
Color Temperature (CCT)	5000K	5000K	5000K	5000K	5000K	5000K
Input Watts*	14	22	40	56	68	78
Output Lumens*	1971	2989	5380	6811	8486	9344
HID Replacement*	50W	70W	100W	150W	175W	200W
Lumens Per Watt*	146	137	135	122	124	121
Color Accuracy (CRI)*	78	78	78	78	78	78

Dimming: On/off driver or 0-10V dimming available for 20, 40 and 52W models
Cold Weather Starting: The minimum starting temperature is -40°C.
Housing: Die-cast aluminum housing and lens frame with (4) 1/2" NPS side conduit entries and weatherproof rear wire plug and access plate
Reflector: Semi-specular, vacuum-metalized polycarbonate
Lens: Vandal-resistant polycarbonate textured opaque for low glare; frosted models available.
Mounting: Ceiling mount to recessed junction with knockout template or directly to ceiling surface, utilizing side conduit entry points.
Gaskets: High-temperature silicone gaskets
Finish: Our environmentally friendly polyester powder coatings are formulated for high-durability and long-lasting color, and contain no VOC or toxic heavy metals.
Color Stability: LED color temperature warrantied not to shift more than 200K in CCT in 5 years
Color Uniformity: RAB's range of CCT (Correlated Color Temperature) follows the guidelines of the American National Standard for Specifications for the Chromaticity of Solid State Lighting (SSL) Products, ANSI C78.377-2017.
Green Technology: Mercury and UV free. RoHS-compliant components.
IESNA LM-79 & LM-80 Testing: RAB LED luminaires have been tested by an independent laboratory in accordance with IESNA LM-79 and LM-80, and have received the Department of Energy "Lighting Facts" label.
California Title 24: 10 and 20 Watt VANLED models equipped with a swivel photocell or mini-sensor comply with 2013 California Title 24 building and electrical codes as a commercial outdoor non-pole-mounted fixture <30 Watts.

*Values shown for 5000K temperature only, with a clear drop lens. Visit rablighting.com for 4000K and 3000K performance, as well as other lenses.

Dimensions and Weights

Flat Lens
Weight: 11.8 lbs

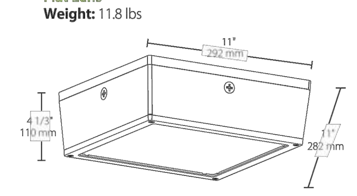

Drop Lens
Weight: 12 lbs

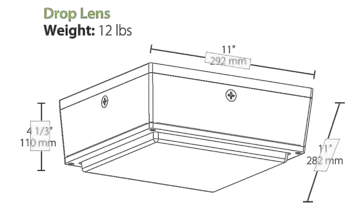

Accessories

VANLED RETROPLATE *(Bronze)*
VANLED RETROPLATEW *(White)*
Mounting plate used to retrofit recessed canopy fixtures.

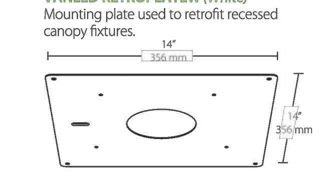

Ordering Information

Product Family	Wattage	Color Temp	Lens	Finish	Voltage	Options	Suffix
VANLED	**10** 10W **20** 20W **28** 28W **40** 40W **52** 52W **65** 65W **75** 75W	**Blank** 5000K **N** 4000K **Y** 3000K	**Blank** Drop Lens **F** Flat Lens[1] **FR** Frosted Drop Lens **FFR** Frosted Flat Lens[1]	**Bronze** Blank **White** W	**120-277, 0-10V Dim** Blank **480,0-10V Dim** /480	**No Options** Blank **Microwave Sensor** /MVS[1] **Wattstopper 8ft** /WS **Wattstopper, 20ft** /WS2 **120V Swivel Photocell** /PCS **277V Swivel Photocell** /PCS2 **480V Swivel Photocell** /PCS4 **Lightcloud® Control** /LC **Emergency Battery** /E2	**No Option** Standard **Complies with the BAA** USA

[1]/MVS option not available with F and FFR lens

CANOPY LIGHT DETAIL 'C1'

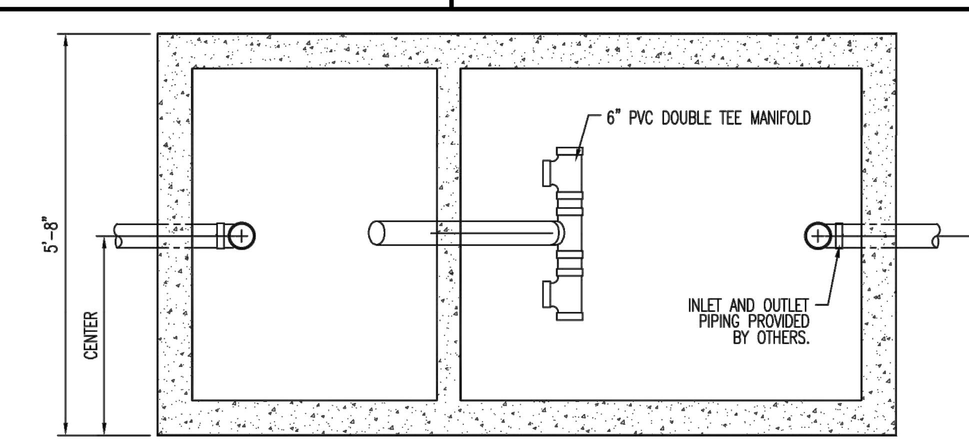

PLAN VIEW

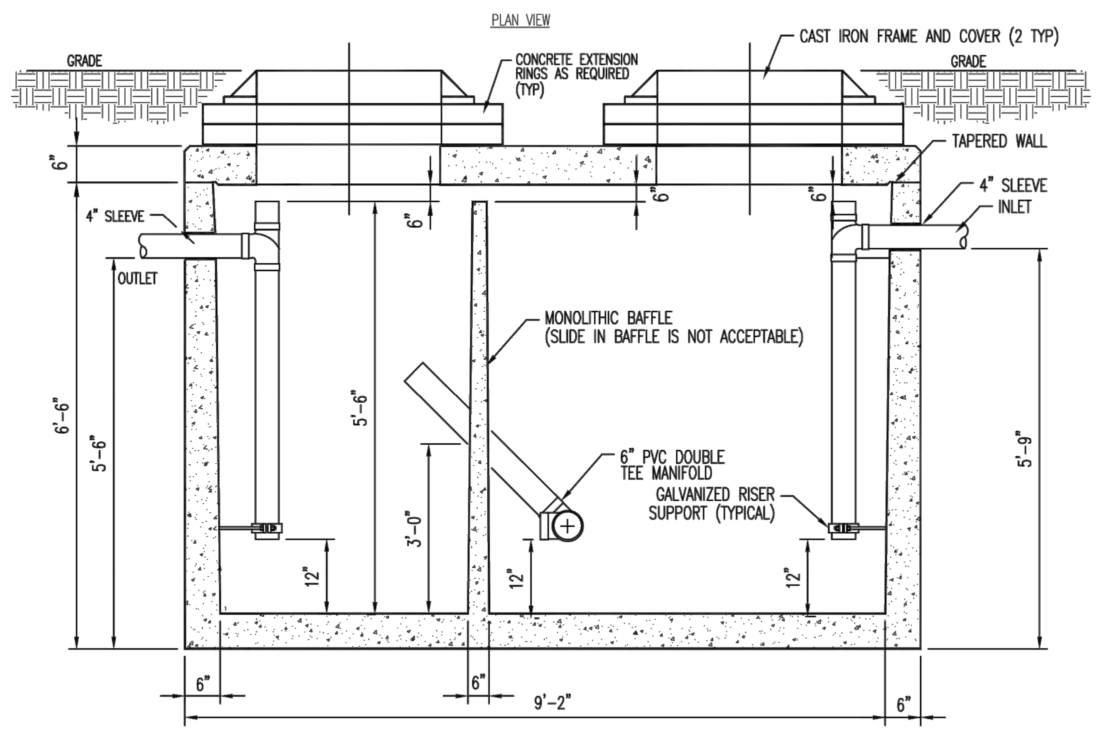

ELEVATION

SPECIFICATIONS
CONCRETE: CLASS 1 CONCRETE WITH DESIGN STRENGTH OF 4500 PSI AT 28 DAYS. UNIT IS OF MONOLITHIC CONSTRUCTION AT FLOOR, WALL AND BAFFLE (NO JOINTS BELOW WATER LEVEL) GROSS EMPTY WEIGHT OF APPROX. 10,000 LBS.

REINFORCEMENT: GRADE 60 REINFORCED WITH STEEL REBAR CONFORMING TO ASTM A615 ON REQUIRED CENTERS OR EQUAL. DESIGN FOR AASHTO H-20 TRAFFIC LOADING.

C.I. CASTINGS: MANHOLE FRAMES, COVERS OR GRATES ARE MANUFACTURED OF GREY CAST IRON CONFORMING TO ASTM A48-76 CLASS 30. MANHOLE SHALL HAVE 24 INCH INSIDE DIAMETER AND BE TRAFFIC DUTY.

ENGINEERING DATA: INTERCEPTOR IS STRUCTURALLY AND HYDRAULICALLY ENGINEERED CONFORMING TO UNIFORM PLUMBING CODE. NOMINAL LIQUID CAPACITY IS 1500 GALLONS WITH GREASE & SOLIDS RETENTION CAPACITY OF APPROXIMATELY 1,770 & 3,130 LBS. RESPECTFULLY. RECOMMENDED FOR AVERAGE FLOW RATE OF 5 GPM & INTERMITTENT FLOW RATE UP TO 13 GPM.

FIELD EXCAVATION AND PREPARATION SHALL BE COMPLETED PRIOR TO DELIVERY OF INTERCEPTOR. USE DIMENSIONAL DATA AS SHOWN.

GREASE TRAP TO BE EPOXY COATED.

MINIMUM EQUAL TO: PARK EQUIP. CO. (1-800-256-8041)
GREASE TRAP MODEL NO. GT-1500

GREASE TRAP DETAIL

NOT TO SCALE

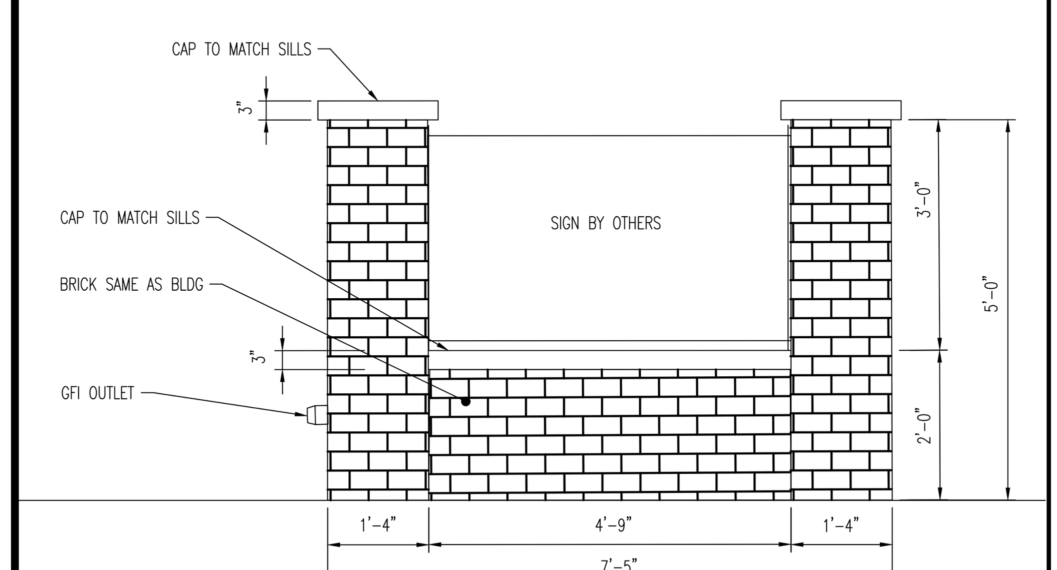

SIGN DETAIL

SIGN DETAIL

Plotted: 03/25/20 - 1:44 PM, By: jgoellner, - Product Ver: 23.1s (LMS Tech)
File: P:\DECPC PROJECTS\1423 Capitol Seniors Housing\99-003 Washington\Dwg\Site Plans\D142399003SD1.dwg, ---> 15 CONSTRUCTION DETAILS

Rev.	Date	Comments	By
1	03/20/20	REVISED PER COMPLETENESS COMMENTS	JTG

THIS PLAN SET IS FOR PERMITTING PURPOSES ONLY AND MAY NOT BE USED FOR CONSTRUCTION

DYNAMIC ENGINEERING
LAND DEVELOPMENT CONSULTING • PERMITTING • GEOTECHNICAL • ENVIRONMENTAL • SURVEY • PLANNING & ZONING
245 Main Street - Suite 110
Chester, NJ 07930
T: 908.879.9229
F: 908.879.0222
www.dynamicec.com
Offices conveniently located in:
Lake Como, New Jersey T: 732.974.0198 | Chester, New Jersey T: 908.879.9229 | Newark, New Jersey T: 973.755.7200 | Toms River, New Jersey T: 732.974.0198
Allen, Texas T: 972.534.2100 | Austin, Texas T: 512.646.2646 | Houston, Texas T: 281.789.6400
Newtown, Pennsylvania T: 267.685.0276 | Delray Beach, Florida T: 561.921.8570

TITLE:
CONSTRUCTION DETAILS

PROJECT: **CAPITOL SENIORS HOUSING**
PROPOSED ASSISTED LIVING
BLOCK 2202, LOT 1
620 PASCACK ROAD (CR 502)
TOWNSHIP OT WASHINGTON, BERGEN COUNTY, NEW JERSEY

JOB No:	1423-99-003
DATE:	01/10/2020
DRAWN BY:	AOV
DESIGNED BY:	MLR
CHECKED BY:	DTS
CHECKED BY:	-
SCALE:	(H) AS (V) SHOWN
SHEET No:	15 OF 21
Rev. #	1

JOSEPH G. JAWORSKI
PROFESSIONAL ENGINEER
NEW JERSEY LICENSE No. 36618

DANIEL T. SEHNAL
PROFESSIONAL ENGINEER
NEW JERSEY LICENSE No. 53572

811 Know what's below. Call before you dig.
PROTECT YOURSELF
ALL STATES REQUIRE NOTIFICATION OF EXCAVATORS, DESIGNERS, OR ANY PERSON PREPARING TO DISTURB THE EARTH'S SURFACE ANYWHERE IN ANY STATE
FOR STATE SPECIFIC DIRECT PHONE NUMBERS VISIT: WWW.CALL811.COM

COPYRIGHT © 2020 - DYNAMIC ENGINEERING CONSULTANTS, PC - ALL RIGHTS RESERVED

MUNICIPAL, COUNTY, STATE AND MUA DETAILS TO SUPERCEDE DYNAMIC ENGINEERING DETAILS WHERE APPLICABLE

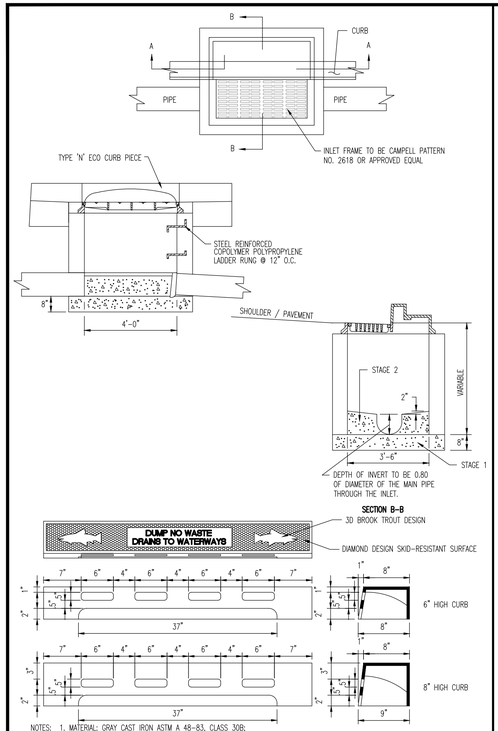

NOTES:
1. MATERIAL: GRAY CAST IRON ASTM A 48-83, CLASS 30B;
2. IN RETROFIT SITUATIONS, THIS CURB PIECE (HEAD) WILL FIT EXISTING CAMPBELL FOUNDRY CO. MANUFACTURED CURB INLETS FOR NJDOT TYPES B, B-1, B-2, D, D-1 AND D-2;
3. NAMEPLATE MESSAGE CAN BE MODIFIED TO YOUR SPECIFIC NEEDS WITHIN AREA SHOWN;
4. CASTING SUPPLIED WITHOUT SURFACE COATING

TYPE 'B' INLET w/ TYPE N ECO GRATE DETAIL

NOT TO SCALE

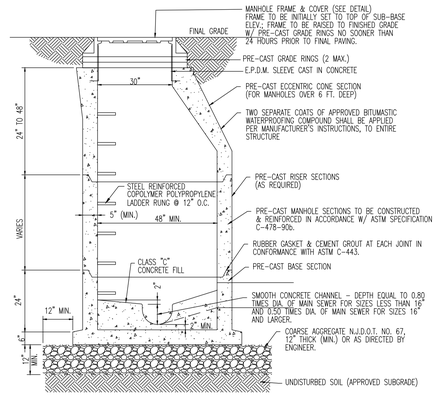

PRECAST SANITARY MANHOLE

NOT TO SCALE

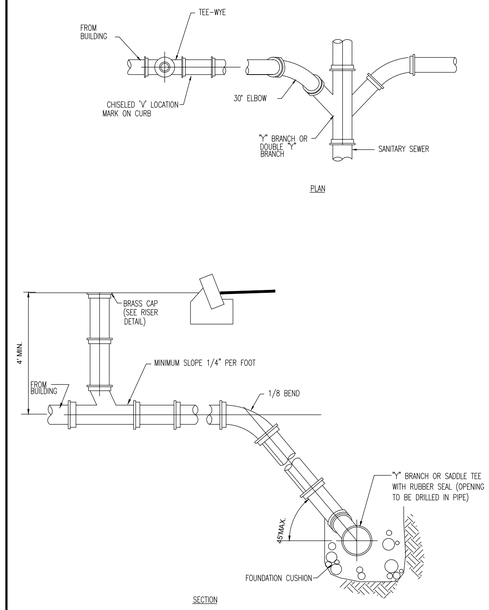

NOTE: 1. REFER TO UTILITY PLAN FOR PIPE SIZES, VERIFY WITH ARCHITECTURAL PLANS.
2. CONTACT ENGINEER WITH ANY CONFLICTS PRIOR TO ANY SEWER CONNECTION WORK.

STANDARD CONNECTION DETAIL

NOT TO SCALE

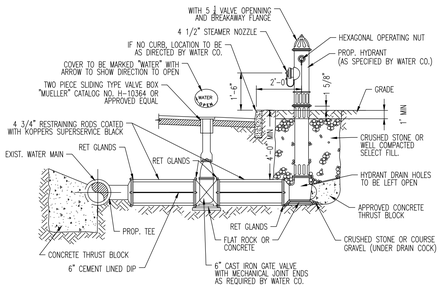

NOTE: REFER TO WATER COMPANY SPECIFICATIONS FOR VALVE/HYDRANT SPECIFICATIONS.

TYPICAL HYDRANT & VALVE INSTALLATION

NOT TO SCALE

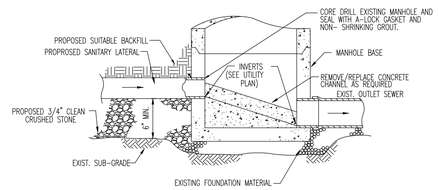

NOTES 1. MAXIMUM DROP BETWEEN INCOMING AND OUTGOING PIPES TO BE 2'.
2. OVER 2' DROP MANHOLE REQUIRED.

SAN. LATERAL TO MH CONNECTION DETAIL

NOT TO SCALE

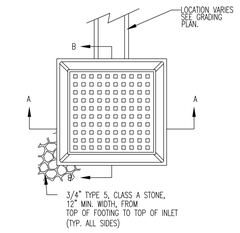

GENERAL NOTES:
1. FOOTING TO BE N.J.D.O.T. CLASS "C" CONCRETE.
2. INVERT & WALLS TO BE N.J.D.O.T. CLASS "C" CONCRETE.
3. IF WALL CONSTRUCTION IS OTHER THAN CONCRETE, WALLS SHALL BE PLASTERED INSIDE & OUTSIDE WITH 1/2" THICK CEMENT PLASTER.
4. FRAME & GRATE TO BE CAMPBELL FOUNDARY CO., NO. 3194A (FOR STANDARD DUTY) OR EQUIV. SET IN CONCRETE.
5. PROVIDE 3/4"ø ALUM. LADDER RUNGS SET AT 12" O.C.
6. WHEN ADDITIONAL DEPTH IS SCHEDULED, WALLS BELOW 8'-0" MEASURED FROM GRATE TO INVERT SHALL BE 12" THICK AND EXTEND 12" BEYOND OUTSIDE OF WALL.

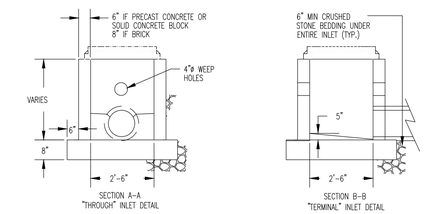

2 X 2 YARD INLET DETAIL

NOT TO SCALE

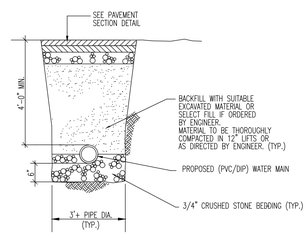

NOTE: PAVEMENT SECTION TO MATCH, AT MINIMUM, ADJOINING PAVEMENT.

WATER SERVICE TRENCH DETAIL

NOT TO SCALE

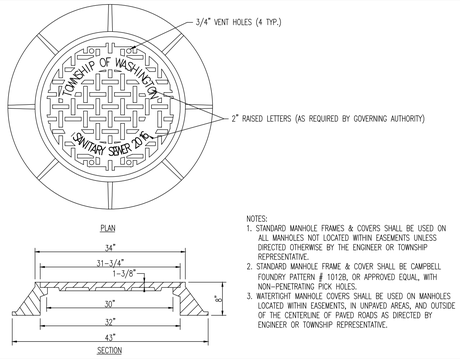

NOTES:
1. STANDARD MANHOLE FRAMES & COVERS SHALL BE USED ON ALL MANHOLES NOT LOCATED WITHIN EASEMENTS UNLESS DIRECTED OTHERWISE BY THE ENGINEER OR TOWNSHIP REPRESENTATIVE.
2. STANDARD MANHOLE FRAME & COVER SHALL BE CAMPBELL FOUNDRY PATTERN # 1012B, OR APPROVED EQUAL, WITH NON-PENETRATING PICK HOLES.
3. WATERTIGHT MANHOLE COVERS SHALL BE USED ON MANHOLES LOCATED WITHIN EASEMENTS, IN UNPAVED AREAS, AND OUTSIDE OF THE CENTERLINE OF PAVED ROADS AS DIRECTED BY ENGINEER OR TOWNSHIP REPRESENTAITVE.

SANITARY MANHOLE FRAME DETAIL

NOT TO SCALE

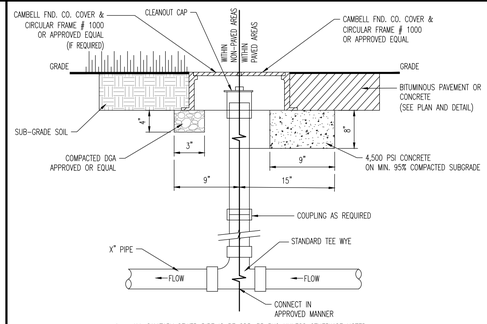

1. ALL SANITARY SEWER PIPE IS BE SDR-35 PVC UNLESS OTHERWISE NOTED.
2. ALL STORM SEWER PIPE IS TO BE SCH-40 PVC UNLESS OTHERWISE NOTED.
3. ALL CLEANOUT CAPS ARE TO BE BRASS FOR SANITARY AND PVC FOR STORM SEWER.
4. X" - SEE PLAN FOR PIPE DIAMETER

CLEANOUT DETAIL

NOT TO SCALE

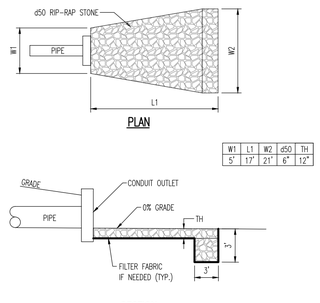

W1	L1	W2	d50	TH
5'	17'	21'	6"	12"

NOTE:
1. FILTER FABRIC SHALL MEET THE MINIMUM REQUIREMENTS SET FORTH IN THE STANDARDS FOR SOIL EROSION AND SEDIMENTATION CONTROL IN NJ.

RIP-RAP DETAIL

NOT TO SCALE

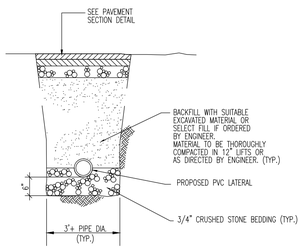

NOTE: PAVEMENT SECTION TO MATCH, AT MINIMUM, ADJOINING PAVEMENT.

SANITARY SEWER TRENCH DETAIL

NOT TO SCALE

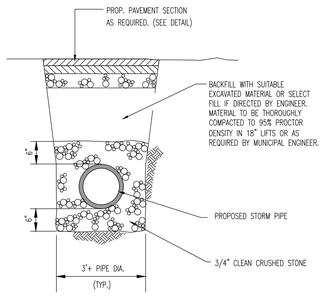

NOTE: PAVEMENT SECTION TO MATCH, AT MINIMUM, ADJOINING PAVEMENT.

STORM SEWER TRENCH DETAIL

NOT TO SCALE

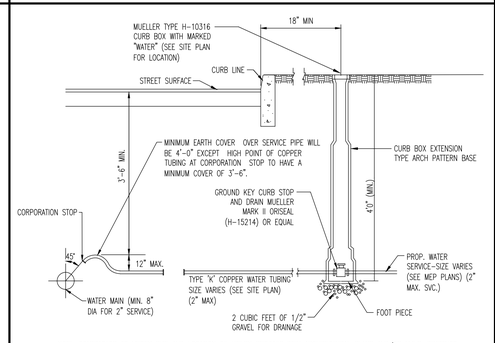

NOTE: CONTRACTOR TO VERIFY SIZE AND LOCATION OF UTILITY SERVICES WITH ARCHITECTURAL PLANS AND/OR M.E.P. DRAWINGS. WHERE CONFLICT EXISTS WITH THE SITE PLAN, ENGINEER TO BE NOTIFIED PRIOR TO CONSTRUCTION TO RESOLVE SAME.

WATER SERVICE CONNECTION

NOT TO SCALE

Rev.	Date	Comments	By
1	03/20/20	REVISED PER COMPLETENESS COMMENTS	JTG

THIS PLAN SET IS FOR PERMITTING PURPOSES ONLY AND MAY NOT BE USED FOR CONSTRUCTION

DYNAMIC ENGINEERING
LAND DEVELOPMENT CONSULTING • PERMITTING • GEOTECHNICAL • ENVIRONMENTAL • SURVEY • PLANNING & ZONING
245 Main Street - Suite 110
Chester, NJ 07930
T: 908.879.9229
F: 908.879.0222
www.dynamicec.com
Offices conveniently located in:
Lake Como, New Jersey T: 732.974.0198 | Chester, New Jersey T: 908.879.9229 | Newark, New Jersey T: 973.755.7200 | Toms River, New Jersey T: 732.974.0198
Allen, Texas T: 972.534.2100 | Austin, Texas T:512.646.2646 | Houston, Texas T: 281.789.6400
Newtown, Pennsylvania T: 267.685.0276 | Delray Beach, Florida T: 561.921.8570

TITLE:

CONSTRUCTION DETAILS

PROJECT: **CAPITOL SENIORS HOUSING**
PROPOSED ASSISTED LIVING
BLOCK 2202, LOT 1
620 PASCACK ROAD (CR 502)
TOWNSHIP OT WASHINGTON, BERGEN COUNTY, NEW JERSEY

JOB No: 1423-99-003	DATE: 01/10/2020
DRAWN BY: AOV	SCALE: (H) AS (V) SHOWN
DESIGNED BY: MLR	SHEET No:
CHECKED BY: DTS	16
CHECKED BY: -	OF 21

JOSEPH G. JAWORSKI
PROFESSIONAL ENGINEER
NEW JERSEY LICENSE No. 36618

DANIEL T. SEHNAL
PROFESSIONAL ENGINEER
NEW JERSEY LICENSE No. 53572

811 Know what's below. Call before you dig.
PROTECT YOURSELF
ALL STATES REQUIRE NOTIFICATION OF EXCAVATORS, DESIGNERS, OR ANY PERSON PREPARING TO DISTURB THE EARTH'S SURFACE ANYWHERE IN ANY STATE.
FOR STATE SPECIFIC DIRECT PHONE NUMBERS VISIT: WWW.CALL811.COM

Rev. # 1

Plotted: 03/25/20 - 1:45 PM, By: jpeliner, - Product Ver: 23.1s (LMS Tech)
File: P:\DECPC PROJECTS\1423 Capitol Seniors Housing\99-003 Washington\Dwg\Site Plans\D142399003SD1.dwg, ---> 16 CONSTRUCTION DETAILS

COPYRIGHT © 2020 - DYNAMIC ENGINEERING CONSULTANTS, PC - ALL RIGHTS RESERVED

MUNICIPAL, COUNTY, STATE AND MUA DETAILS TO SUPERCEDE DYNAMIC ENGINEERING DETAILS WHERE APPLICABLE

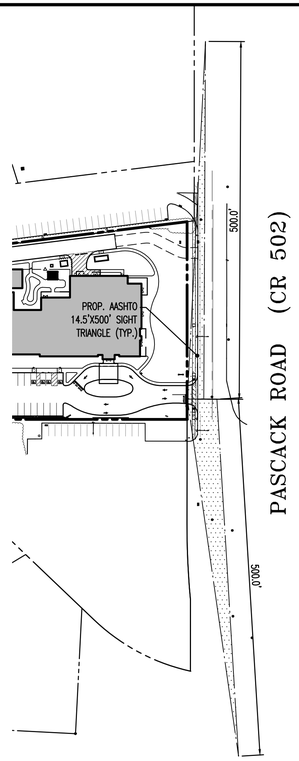

SIGHT TRIANGLE DETAIL
NOT TO SCALE

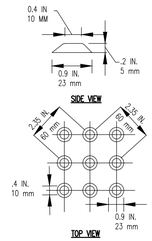

NOTES:

1. DETECTABLE WARNINGS SHALL BE A PRE-MANUFACTURED ARMOUR TILE TACTILE SYSTEM OR APPROVED EQUIVALENT.
2. WARNING SURFACE SHALL CONTRAST VISUALLY WITH ADJOINING SURFACES, EITHER LIGHT ON DARK OR DARK ON LIGHT PER LATEST A.D.A. ACCESSIBILITY GUIDELINES.
3. CONTRACTOR TO COORDINATE SPECIFIC SYSTEM AND MATERIALS UTILIZED WITH THE ENGINEER TO ENSURE LOCAL, STATE AND A.D.A. COMPLIANCE PRIOR TO CONSTRUCTION.

TRUNCATED DOME PATTERN FOR A.D.A. DETECTABLE WARNING SURFACE
NOT TO SCALE

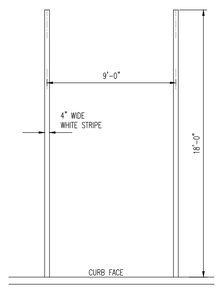

PARKING STALL STRIPING DETAIL
NOT TO SCALE

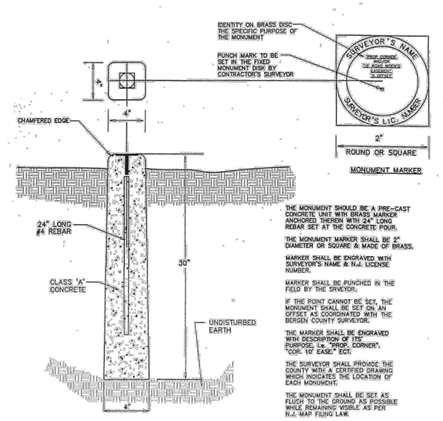

BERGEN COUNTY MONUMENT DETAIL
N.T.S.

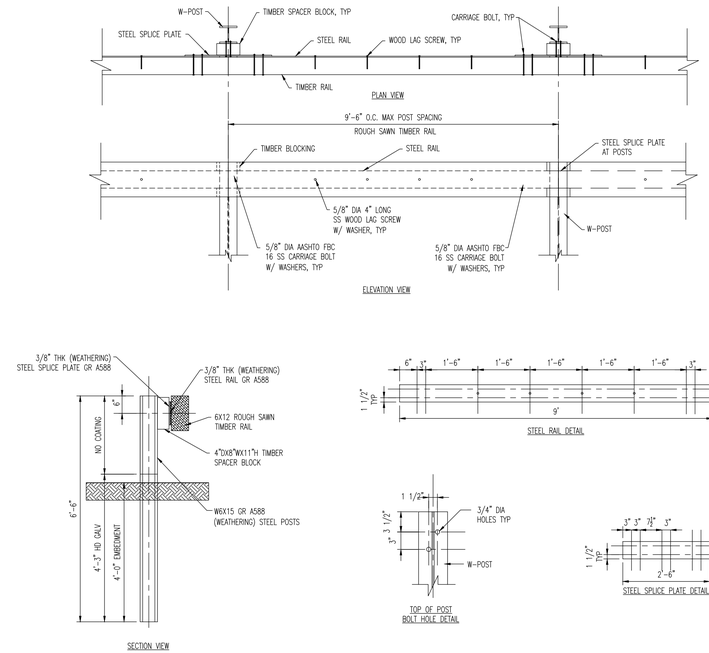

NOTE: THIS GUIDE RAIL SYSTEM HAS BEEN CRASH TESTED BY THE FEDERAL HIGHWAY ADMINISTRATION IN ACCORDANCE TO THE NATIONAL COOPERATIVE HIGHWAY RESEARCH PROGRAM REPORT 350 FOR CATEGORIZATION AS TEST LEVEL THREE (TL-3). TL-3 CONSISTS OF CRASH TESTS WITH A PASSENGER CAR AND PICKUP TRUCK TRAVELING AT 62 MPH IMPACTING AT 20 DEG AND 25 DEG, RESPECTIVELY.

AESTHETIC GUIDERAIL DETAIL
NOT TO SCALE

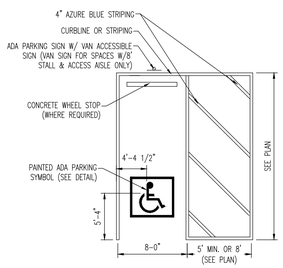

NOTES:

1. PAVEMENT STRIPING FOR ALL ADA PARKING SPACES SHALL BE PAINTED AZURE BLUE.
2. WHERE AN ADA PARKING STALL MEETS A STANDARD PARKING STALL, AN AZURE BLUE AND WHITE PAVEMENT STRIPE SHALL BE PAINTED.
3. ALL PAVEMENT STRIPING, MARKINGS AND SIGNAGE SHALL BE CONSTRUCTED IN ACCORDANCE WITH THE LATEST ADA ACCESSIBILITY GUIDELINES.

ADA STALL MARKINGS DETAIL
NOT TO SCALE

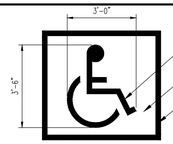

NOTE: ALL PAVEMENT STRIPING, MARKINGS & APPLICABLE SIGNAGE SHALL BE CONSTRUCTED IN ACCORDANCE WITH THE LATEST A.D.A. ACCESSIBILITY GUIDELINES.

PAINTED A.D.A. PARKING SYMBOL DETAIL
NOT TO SCALE

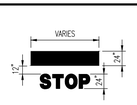

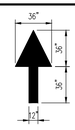

NOTE: ARROWS AND WORDS CAN BE ARRANGED IN OTHER COMBINATIONS THAN THOSE ILLUSTRATED HERE TO ACHIEVE DESIRED RESULT. ALL PAINT TO BE THERMOPLASTIC.

PAINTED MARKING DETAILS
NOT TO SCALE

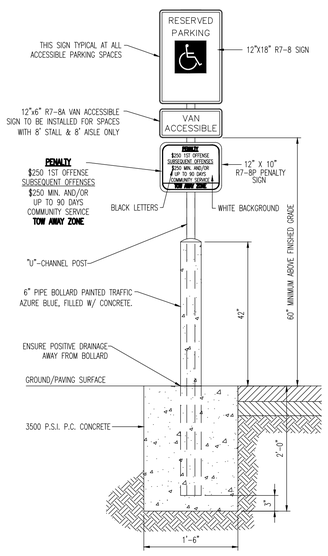

NOTES:

1.) IF AT THE TIME OF CONSTRUCTION THE STATE OF NEW JERSEY HAS APPROVED FINES/PENALTIES DIFFERENT THAN THOSE INDICATED ON THIS DETAIL, CONTRACTOR IS TO PROVIDE SIGNAGE INDICATING THE CURRENT FINES/PENALTIES AS APPROVED BY THE STATE OF NEW JERSEY.

2.) VAN ACCESSIBLE SIGN SHALL BE 60" MINIMUM ABOVE FINISHED GRADE WHERE APPLICABLE. WHEN VAN ACCESSIBLE IS NOT REQUIRED, R7-8 SIGN SHALL BE SET AT 60" MINIMUM ABOVE FINISHED GRADE.

A.D.A. PARKING SIGN ON BOLLARD DETAIL
NOT TO SCALE

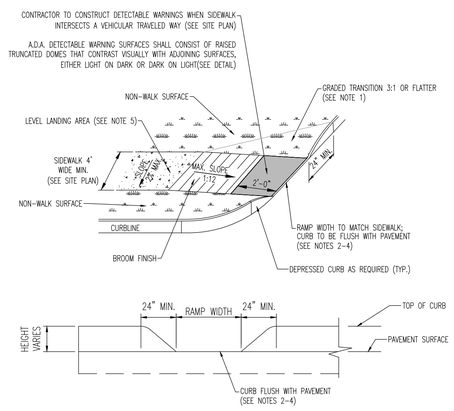

TYPICAL ELEVATION FOR DEPRESSED CURB

NOTES:

1.) WHERE A PEDESTRIAN CIRCULATION PATH CROSSES THE CURB RAMP, FLARE SIDES SHALL BE PROVIDED AT A SLOPE NO STEEPER THEN 1:10.

2.) CONSTRUCT DEPRESSED CURB FOR CURB RAMPS FLUSH TO ADJACENT PAVEMENT. GRADE FLOW LINE TO ENSURE POSITIVE DRAINAGE AND PREVENT PONDING. FOR LEVEL TURNING SPACES BEHIND DEPRESSED CURB, ADJUST SLOPES TO PROVIDE POSITIVE DRAINAGE.

3.) CURB RAMPS MAY NOT EXTEND INTO ANY PORTION OF THE PARKING SPACE OR ASSOCIATED STRIPED ISLAND.

4.) COUNTER SLOPES OF ADJOINING GUTTERS AND PAVEMENT SHALL NOT BE STEEPER THAN 1:20 WITH A MAX. CROSS SLOPE OF 2%.

5.) A LEVEL LANDING AREA (MAX. SLOPE 2% IN ANY DIRECTION) SHALL BE PROVIDED AT THE TOP OF THE RAMP. THE LANDING CLEAR LENGTH SHALL BE 36" MIN AND THE CLEAR WIDTH SHALL BE AS WIDE AS THE RAMP.

6.) CURB RAMPS, PAVEMENT MARKINGS & APPLICABLE SIGNAGE SHALL BE CONSTRUCTED IN ACCORDANCE WITH THE LATEST A.D.A. ACCESSIBILITY GUIDELINES.

A.D.A. PERPENDICULAR CURB RAMP DETAIL (W/OUT FLARE SIDES)
NOT TO SCALE

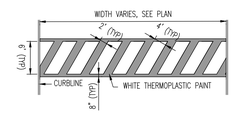

PAINTED CROSSWALK STRIPING DETAIL
NOT TO SCALE

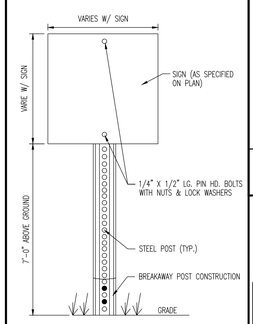

SIGN POST DETAIL
NOT TO SCALE

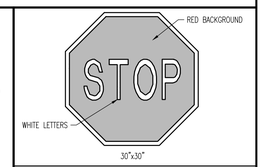

R1-1 SIGN DETAIL
NOT TO SCALE

Rev.	Date	Comments	By
1.	03/20/20	REVISED PER COMPLETENESS COMMENTS	JTG

THIS PLAN SET IS FOR PERMITTING PURPOSES ONLY AND MAY NOT BE USED FOR CONSTRUCTION

DYNAMIC ENGINEERING
LAND DEVELOPMENT CONSULTING • PERMITTING • GEOTECHNICAL • ENVIRONMENTAL • SURVEY • PLANNING & ZONING
245 Main Street - Suite 110
Chester, NJ 07930
T: 908.879.9229
F: 908.879.0222
www.dynamicec.com
Offices conveniently located in:
Lake Como, New Jersey T: 732.974.0198 | Chester, New Jersey T: 908.879.9229 | Newark, New Jersey T: 973.755.7200 | Toms River, New Jersey T: 732.974.0198
Allen, Texas T: 972.534.2100 | Austin, Texas T:512.646.2646 | Houston, Texas T: 281.789.6400
Newtown, Pennsylvania T: 267.685.0276 | Delray Beach, Florida T: 561.921.8570

TITLE: CONSTRUCTION DETAILS

PROJECT: **CAPITOL SENIORS HOUSING**
PROPOSED ASSISTED LIVING
BLOCK 2202, LOT 1
620 PASCACK ROAD (CR 502)
TOWNSHIP OT WASHINGTON, BERGEN COUNTY, NEW JERSEY

JOB No: 1423-99-003
DATE: 01/10/2020
DRAWN BY: AOV
SCALE:(H) AS (V) SHOWN
DESIGNED BY: MLR
CHECKED BY: DTS
CHECKED BY: –
SHEET No: 17 OF 21

JOSEPH G. JAWORSKI
PROFESSIONAL ENGINEER
NEW JERSEY LICENSE No. 36618

DANIEL T. SEHNAL
PROFESSIONAL ENGINEER
NEW JERSEY LICENSE No. 53572

811 PROTECT YOURSELF
ALL STATES REQUIRE NOTIFICATION OF EXCAVATORS, DESIGNERS, OR ANY PERSON PREPARING TO DISTURB THE EARTH'S SURFACE ANYWHERE IN ANY STATE
Know what's below. Call before you dig.
FOR STATE SPECIFIC DIRECT PHONE NUMBERS VISIT: WWW.CALL811.COM

Rev. # 1

Plotted: 03/25/20 – 1:45 PM, By: jpoeliner, – Product Ver: 23.1s (LMS Tech)
File: P:\DECPC PROJECTS\1423 Capitol Seniors Housing\99-003 Washington\Dwg\Site Plans\D1423990030S1.dwg, ---> 17 CONSTRUCTION DETAILS

COPYRIGHT © 2020 – DYNAMIC ENGINEERING CONSULTANTS, PC – ALL RIGHTS RESERVED

THIS PLAN TO BE UTILIZED FOR VEHICLE CIRCULATION PURPOSES ONLY

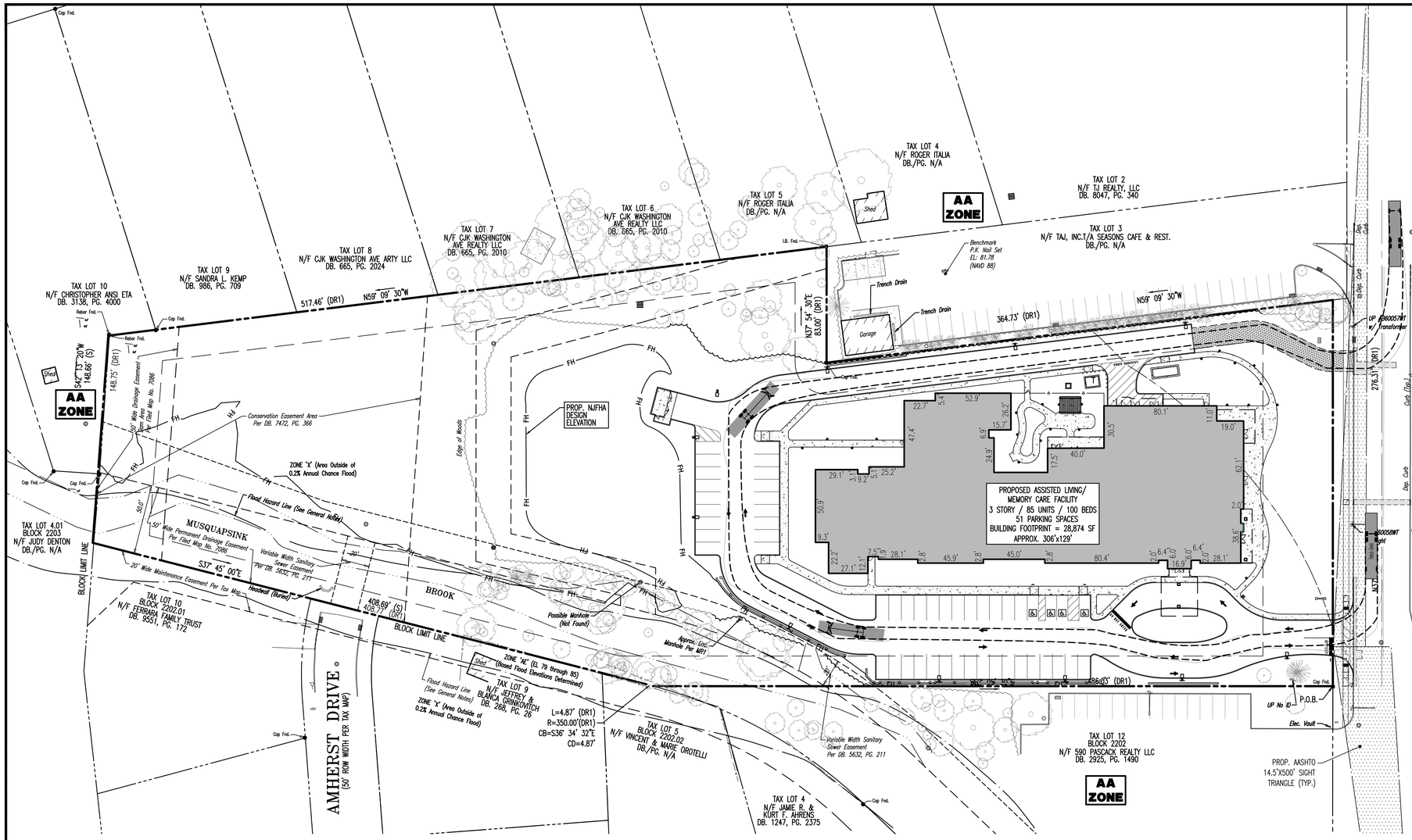

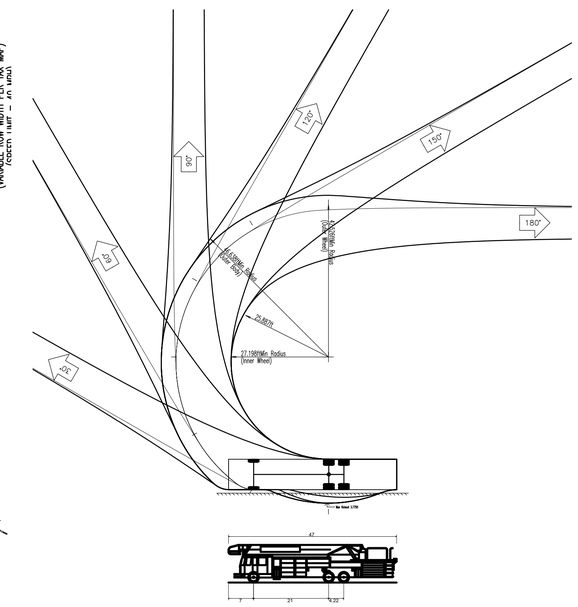

Firetruck - Generic

Overall Length	47.000ft
Overall Width	8.500ft
Overall Body Height	10.519ft
Min Body Ground Clearance	0.950ft
Track Width	8.500ft
Lock-to-lock time	6.00s
Max Wheel Angle	40.00°

VEHICLE LEGEND:

CHASSIS ENVELOPE

VEHICLE BODY ENVELOPE

GRAPHIC SCALE

-40 0 20 40 80 160

(IN FEET)
1 INCH = 40 FT.

Rev.	Date	Comments	By
1	03/20/20	REVISED PER COMPLETENESS COMMENTS	JTG

THIS PLAN SET IS FOR PERMITTING PURPOSES ONLY AND MAY NOT BE USED FOR CONSTRUCTION

DYNAMIC ENGINEERING
LAND DEVELOPMENT CONSULTING • PERMITTING • GEOTECHNICAL • ENVIRONMENTAL • SURVEY • PLANNING & ZONING
Offices conveniently located in:
Lake Como, New Jersey T: 732.974.0198 | Chester, New Jersey T: 908.879.9229 | Newark, New Jersey T: 973.755.7200 | Toms River, New Jersey T: 732.974.0198
Allen, Texas T: 972.534.2100 | Austin, Texas T:512.646.2646 | Houston, Texas T: 281.789.6400
Newtown, Pennsylvania T: 267.685.0276 | Delray Beach, Florida T: 561.921.8570
245 Main Street - Suite 110
Chester, NJ 07930
T: 908.879.9229
F: 908.879.0222
www.dynamicec.com

TITLE:

VEHICAL CIRCULATION PLAN – FIRE

PROJECT: **CAPITOL SENIORS HOUSING**
PROPOSED ASSISTED LIVING
BLOCK 2202, LOT 1
620 PASCACK ROAD (CR 502)
TOWNSHIP OT WASHINGTON, BERGEN COUNTY, NEW JERSEY

JOB No: 1423-99-003	DATE: 01/10/2020
DRAWN BY: JTG	SCALE: (H) 1"=40' (V)
DESIGNED BY: MLR	SHEET No:
CHECKED BY: DTS	18
CHECKED BY: _	OF 21

JOSEPH G. JAWORSKI
PROFESSIONAL ENGINEER
NEW JERSEY LICENSE No. 36618

DANIEL T. SEHNAL
PROFESSIONAL ENGINEER
NEW JERSEY LICENSE No. 53572

811 PROTECT YOURSELF
ALL STATES REQUIRE NOTIFICATION OF ENGINEERS, DESIGNERS, OR ANY PERSON PLANNING TO DIGGING BE DIRECT SURFACE ANYWHERE IN ANY STATE
Know what's below Call before you dig.
FOR STATE SPECIFIC DIRECT PHONE NUMBERS VISIT: WWW.CALL811.COM

Rev. # 1

Plotted: 03/25/20 – 1:45 PM, By: jgeslinger, – Product Ver: 23.1s (LMS Tech)
File: P:\DECPC PROJECTS\1423 Capital Seniors Housing\99-003 Washington\Dwg\Site Plans\01423990035V1.dwg, ---> 18 VEHICAL CIRCULATION PLAN – FIRE

COPYRIGHT © 2020 – DYNAMIC ENGINEERING CONSULTANTS, PC – ALL RIGHTS RESERVED

THIS PLAN TO BE UTILIZED FOR VEHICLE CIRCULATION PURPOSES ONLY

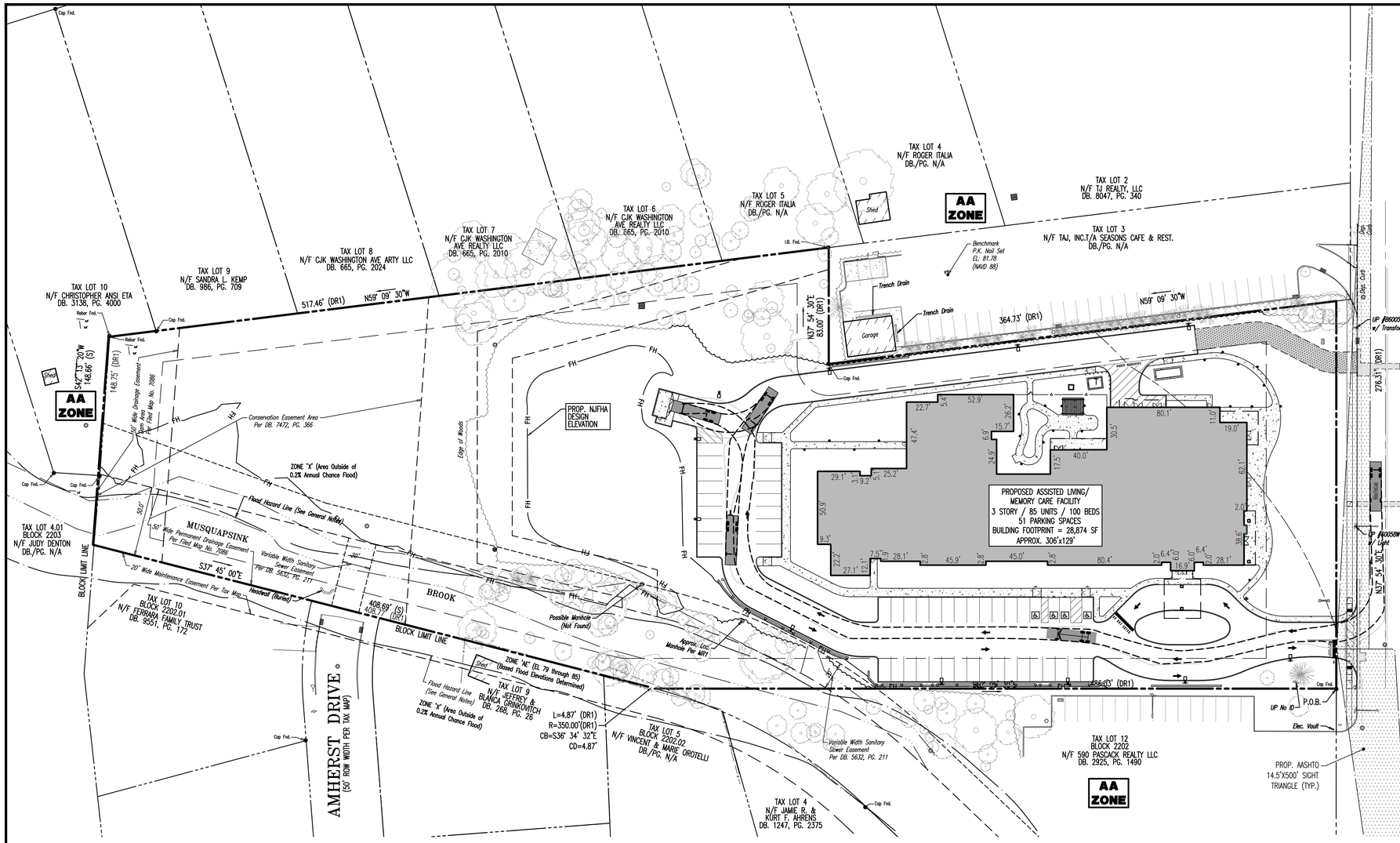

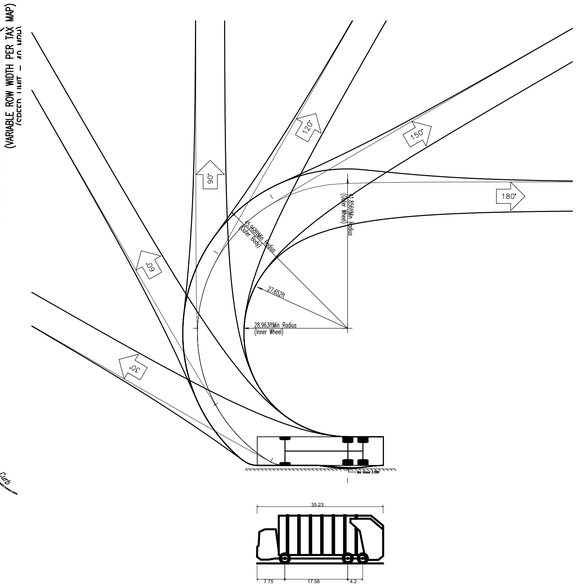

Refuse (Front Load)	
Overall Length	35.230ft
Overall Width	8.000ft
Overall Body Height	13.500ft
Min Body Ground Clearance	0.961ft
Track Width	8.000ft
Lock-to-lock time	6.00s
Max Wheel Angle	33.90°

VEHICLE LEGEND:

CHASSIS ENVELOPE

VEHICLE BODY ENVELOPE

GRAPHIC SCALE

-40 0 20 40 80 160

(IN FEET)
1 INCH = 40 FT.

Rev.	Date	Comments	By
1	03/20/20	REVISED PER COMPLETENESS COMMENTS	JTG

THIS PLAN SET IS FOR PERMITTING PURPOSES ONLY AND MAY NOT BE USED FOR CONSTRUCTION

DYNAMIC ENGINEERING
LAND DEVELOPMENT CONSULTING • PERMITTING • GEOTECHNICAL • ENVIRONMENTAL • SURVEY • PLANNING & ZONING
Offices conveniently located in:
Lake Como, New Jersey T: 732.974.0198 | Chester, New Jersey T: 908.879.9229 | Newark, New Jersey T: 973.755.7200 | Toms River, New Jersey T: 732.974.0198
Allen, Texas T: 972.534.2100 | Austin, Texas T:512.646.2646 | Houston, Texas T: 281.789.6400
Newtown, Pennsylvania T: 267.685.0276 | Delray Beach, Florida T: 561.921.8570

245 Main Street - Suite 110
Chester, NJ 07930
T: 908.879.9229
F: 908.879.0222
www.dynamicec.com

TITLE:
VEHICAL CIRCULATION PLAN – REFUSE

PROJECT: **CAPITOL SENIORS HOUSING**
PROPOSED ASSISTED LIVING
BLOCK 2202, LOT 1
620 PASCACK ROAD (CR 502)
TOWNSHIP OT WASHINGTON, BERGEN COUNTY, NEW JERSEY

JOB No: 1423-99-003	DATE: 01/10/2020
DRAWN BY: JTG	SCALE: (H) 1"=40' (V)
DESIGNED BY: MLR	SHEET No:
CHECKED BY: DTS	19
CHECKED BY: _	OF 21

JOSEPH G. JAWORSKI
PROFESSIONAL ENGINEER
NEW JERSEY LICENSE No. 36618

DANIEL T. SEHNAL
PROFESSIONAL ENGINEER
NEW JERSEY LICENSE No. 53572

811 PROTECT YOURSELF
ALL STATES REQUIRE NOTIFICATION OF ENGINEERS, DESIGNERS, OR ANY PERSON PLANNING TO DISTURB THE DIRECT SURFACE ANYWHERE IN ANY STATE
Know what's below Call before you dig.
FOR STATE SPECIFIC DIRECT PHONE NUMBERS VISIT: WWW.CALL811.COM

Rev. # 1

Plotted: 03/25/20 – 1:45 PM, By: jgeslinger, – Product Ver: 23.1s (LMS Tech)
File: P:\DECPC PROJECTS\1423 Capital Seniors Housing\99-003 Washington\Dwg\Site Plans\01423990035V1.dwg, ---> 19 VEHICAL CIRCULATION PLAN – REFUSE

COPYRIGHT © 2020 – DYNAMIC ENGINEERING CONSULTANTS, PC – ALL RIGHTS RESERVED

THIS PLAN TO BE UTILIZED FOR VEHICLE CIRCULATION PURPOSES ONLY

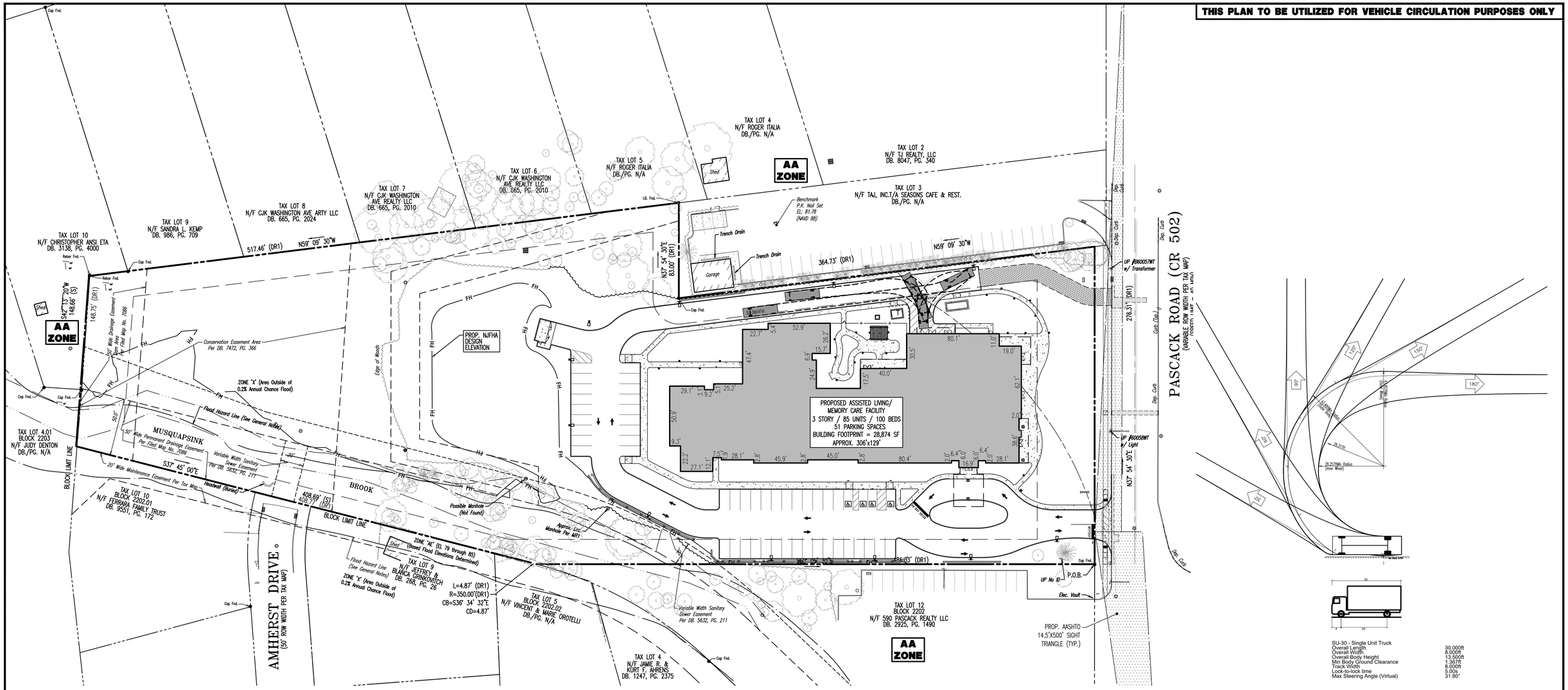

SU-30 - Single Unit Truck

Overall Length	30.000ft
Overall Width	8.000ft
Overall Body Height	13.500ft
Min Body Ground Clearance	1.367ft
Track Width	8.000ft
Lock-to-lock time	5.00s
Max Steering Angle (Virtual)	31.80°

VEHICLE LEGEND:

CHASSIS ENVELOPE

VEHICLE BODY ENVELOPE

GRAPHIC SCALE

−40 0 20 40 80 160

(IN FEET)
1 INCH = 40 FT.

Rev.	Date	Comments	By
1	03/20/20	REVISED PER COMPLETENESS COMMENTS	JTG

THIS PLAN SET IS FOR PERMITTING PURPOSES ONLY AND MAY NOT BE USED FOR CONSTRUCTION

DYNAMIC ENGINEERING

LAND DEVELOPMENT CONSULTING • PERMITTING • GEOTECHNICAL • ENVIRONMENTAL • SURVEY • PLANNING & ZONING

Offices conveniently located in:
Lake Como, New Jersey T: 732.974.0198 | Chester, New Jersey T: 908.879.9229 | Newark, New Jersey T: 973.755.7200 | Toms River, New Jersey T: 732.974.0198
Allen, Texas T: 972.534.2100 | Austin, Texas T:512.646.2646 | Houston, Texas T: 281.789.6400
Newtown, Pennsylvania T: 267.685.0276 | Delray Beach, Florida T: 561.921.8570

245 Main Street - Suite 110
Chester, NJ 07930
T: 908.879.9229
F: 908.879.0222
www.dynamicec.com

TITLE:
VEHICAL CIRCULATION PLAN – DELIVERY

PROJECT: **CAPITOL SENIORS HOUSING**
PROPOSED ASSISTED LIVING
BLOCK 2202, LOT 1
620 PASCACK ROAD (CR 502)
TOWNSHIP OT WASHINGTON, BERGEN COUNTY, NEW JERSEY

JOB No: 1423-99-003	DATE: 01/10/2020
DRAWN BY: JTG	SCALE: (H) 1"=40' (V)
DESIGNED BY: MLR	SHEET No:
CHECKED BY: DTS	20
CHECKED BY: _	OF 21

JOSEPH G. JAWORSKI
PROFESSIONAL ENGINEER
NEW JERSEY LICENSE No. 36618

DANIEL T. SEHNAL
PROFESSIONAL ENGINEER
NEW JERSEY LICENSE No. 53572

811 PROTECT YOURSELF
ALL STATES REQUIRE NOTIFICATION OF EXCAVATORS, DESIGNERS, OR ANY PERSON CONTEMPLATING TO DISTURB THE DIRECT SURFACE ANYWHERE IN ANY STATE
Know what's below. Call before you dig.
FOR STATE SPECIFIC DIRECT PHONE NUMBERS VISIT: WWW.CALL811.COM

Rev. # 1

Plotted: 03/25/20 – 1:45 PM, By: jgeslinger, – Product Ver: 23.1s (LMS Tech)
File: P:\DECPC PROJECTS\1423 Capital Seniors Housing\99-003 Washington\Dwg\Site Plans\01423990035V1.dwg, ---> 20 VEHICAL CIRCULATION PLAN – DELIVERY

COPYRIGHT © 2020 – DYNAMIC ENGINEERING CONSULTANTS, PC – ALL RIGHTS RESERVED

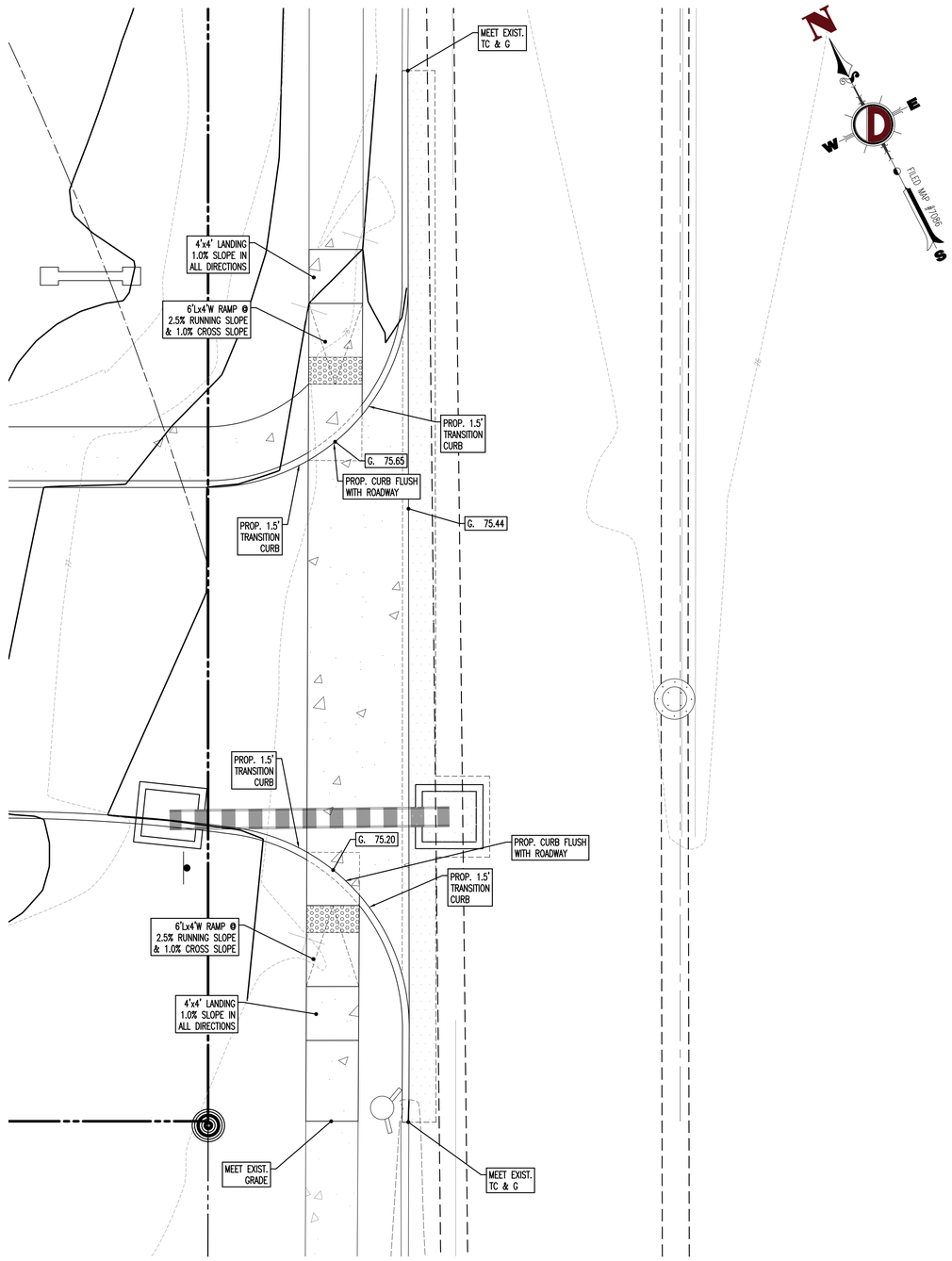

ADA RAMPS AT PASCACK ROAD DRIVEWAY (SOUTH)

ADA NOTES

ALL SLOPES INDICATED ARE ACTUAL. CONTRACTOR TO REFER TO LATEST ADA GUIDELINES AND NJ BARRIER FREE SUBCODE (NJAC 5:23-7) FOR SLOPE LIMITS. AT THE TIME OF PLAN DESIGN, THE SLOPE LIMITS ARE AS FOLLOWS:

SIDEWALKS/ ACCESSIBLE ROUTES
- RUNNING SLOPE: 1:20 (5%) MAX. (4.5% MAX. FOR NEW CONSTRUCTION)
- CROSS SLOPE: 1:48 (2.08%) MAX., 1.0% MIN. (1.5% MAX. FOR NEW CONSTRUCTION)
- INTERSECTION SLOPE: 1:48 (2.08%) MAX. IN ALL DIRECTIONS (1.5% MAX. FOR NEW CONSTRUCTION)
- CHANGE IN LEVELS: ¼" MAX. HEIGHT OR ½" MAX. HEIGHT WITH BEVELED EDGE BEVELED EDGE SLOPE OF 1:2 (50%) MAX.
- GAPS: ½" MAX. WIDTH ELONGATED OPENINGS SHALL BE PLACED SO LONG DIMENSION IS PERPENDICULAR TO PATH OF TRAVEL

CURB RAMP
- SLOPE 1:12 (8.3%) MAX. (7.4% MAX. FOR NEW CONSTRUCTION)
- SIDE FLARE SLOPE: 1:10 (10%) MAX. (WHERE PEDS CROSS RAMP)
- BOTTOM LANDING: 48" MIN. LENGTH; WIDTH TO MATCH CURB RAMP; 1:48 MAX. (2.08%) IN ALL DIRECTIONS (1.5% MAX. FOR NEW CONSTRUCTION)
- TOP LANDING: 36" MIN. LENGTH; WIDTH TO MATCH CURB RAMP; 1:48 MAX. (2.08%) CROSS SLOPE (1.5% MAX. FOR NEW CONSTRUCTION) AND 1:20 (5%) RUNNING SLOPE (4.5% MAX FOR NEW CONSTRUCTION)

ACCESSIBILITY PARKING STALLS
- SPACE AND ACCESS AISLE SLOPE: 1:48 MAX. (2.08%) IN ALL DIRECTIONS (1.5% MAX. FOR NEW CONSTRUCTION)

CROSSWALKS
- RUNNING SLOPE: 1:20 (5%) MAX. (4.5% MAX. FOR NEW CONSTRUCTION)
- CROSS SLOPE: 1:48 (2.08%) MAX. (1.5% MAX. FOR NEW CONSTRUCTION)
- CHANGE IN LEVELS: ¼" MAX. HEIGHT OR ½" MAX. HEIGHT WITH BEVELED EDGE. BEVELED EDGE SLOPE OF 1:2 (50%) MAX.
- GAPS: 1/2" MAX. WIDTH ELONGATED OPENINGS SHALL BE PLACED SO LONG DIMENSION IS PERPENDICULAR TO PATH OF TRAVEL

RAMPS
- SLOPE: 1:12 (8.3%) MAX. (7.4% MAX. FOR NEW CONSTRUCTION)
- EXISTING RAMPS; SLOPE: 1:10 (10%) MAX. FOR RISE OF 6"; 1:8 (12.5%) MAX. FOR MAX. RISE OF 3"
- MAX. RISE: 30"
- MIN. CLEAR WIDTH: 36"
- MIN. LANDING CLEAR LENGTH: 60"
- MAX. CROSS SLOPE: 1:48 (2.08%) (1.5% MAX. FOR NEW CONSTRUCTION)

GRAPHIC SCALE

-5 0 2.5 5 10 20

(IN FEET)
1 INCH = 5 FT.

Rev.	Date	Comments	By
1	03/20/20	REVISED PER COMPLETENESS COMMENTS	JTG

THIS PLAN SET IS FOR PERMITTING PURPOSES ONLY AND MAY NOT BE USED FOR CONSTRUCTION

DYNAMIC ENGINEERING
LAND DEVELOPMENT CONSULTING • PERMITTING • GEOTECHNICAL • ENVIRONMENTAL • SURVEY • PLANNING & ZONING
Offices conveniently located in:
Lake Como, New Jersey T: 732.974.0198 | Chester, New Jersey T: 908.879.9229 | Newark, New Jersey T: 973.753.7200 | Toms River, New Jersey T: 732.974.0198
Allen, Texas T: 972.534.2100 | Austin, Texas T:512.646.2646 | Houston, Texas T: 281.789.4400
Newtown, Pennsylvania T: 267.685.0276 | Delray Beach, Florida T: 561.921.8570
245 Main Street - Suite 110
Chester, NJ 07930
T: 908.879.9229
F: 908.879.0222
www.dynamicec.com

TITLE:

ADA RAMP EXHIBIT

PROJECT: **CAPITOL SENIORS HOUSING**
PROPOSED ASSISTED LIVING
BLOCK 2202, LOT 1
620 PASCACK ROAD (CR 502)
TOWNSHIP OT WASHINGTON, BERGEN COUNTY, NEW JERSEY

JOB No: 1423-99-003
DATE: 01/10/2020
DRAWN BY: JTG
SCALE: (H) 1"=5' (V)
DESIGNED BY: MLR
CHECKED BY: DTS
CHECKED BY: –
SHEET No: 21 OF 21
Rev. # 1

JOSEPH G. JAWORSKI
PROFESSIONAL ENGINEER
NEW JERSEY LICENSE No. 36618

DANIEL T. SEHNAL
PROFESSIONAL ENGINEER
NEW JERSEY LICENSE No. 53572

811 PROTECT YOURSELF
ALL STATES REQUIRE NOTIFICATION OF EXCAVATIONS, DEMOLITIONS, OR ANY PERSON PREPARING TO DISTURB THE EARTH'S SURFACE ANYWHERE IN ANY STATE
Three days before Call before you dig.
FOR STATE SPECIFIC DIRECT PHONE NUMBERS VISIT: WWW.CALL811.COM

Plotted: 03/25/20 – 1:46 PM, By: jgoeliner, – Product Ver: 23.1s (LMS Tech)
File: P:\DEGPC PROJECTS\1423 Capitol Seniors Housing\99-003 Washington\Dwg\Site Plans\D1423990035ADA1.dwg, ---> 21 ADA RAMP EXHIBIT

COPYRIGHT © 2020 – DYNAMIC ENGINEERING CONSULTANTS, PC – ALL RIGHTS RESERVED