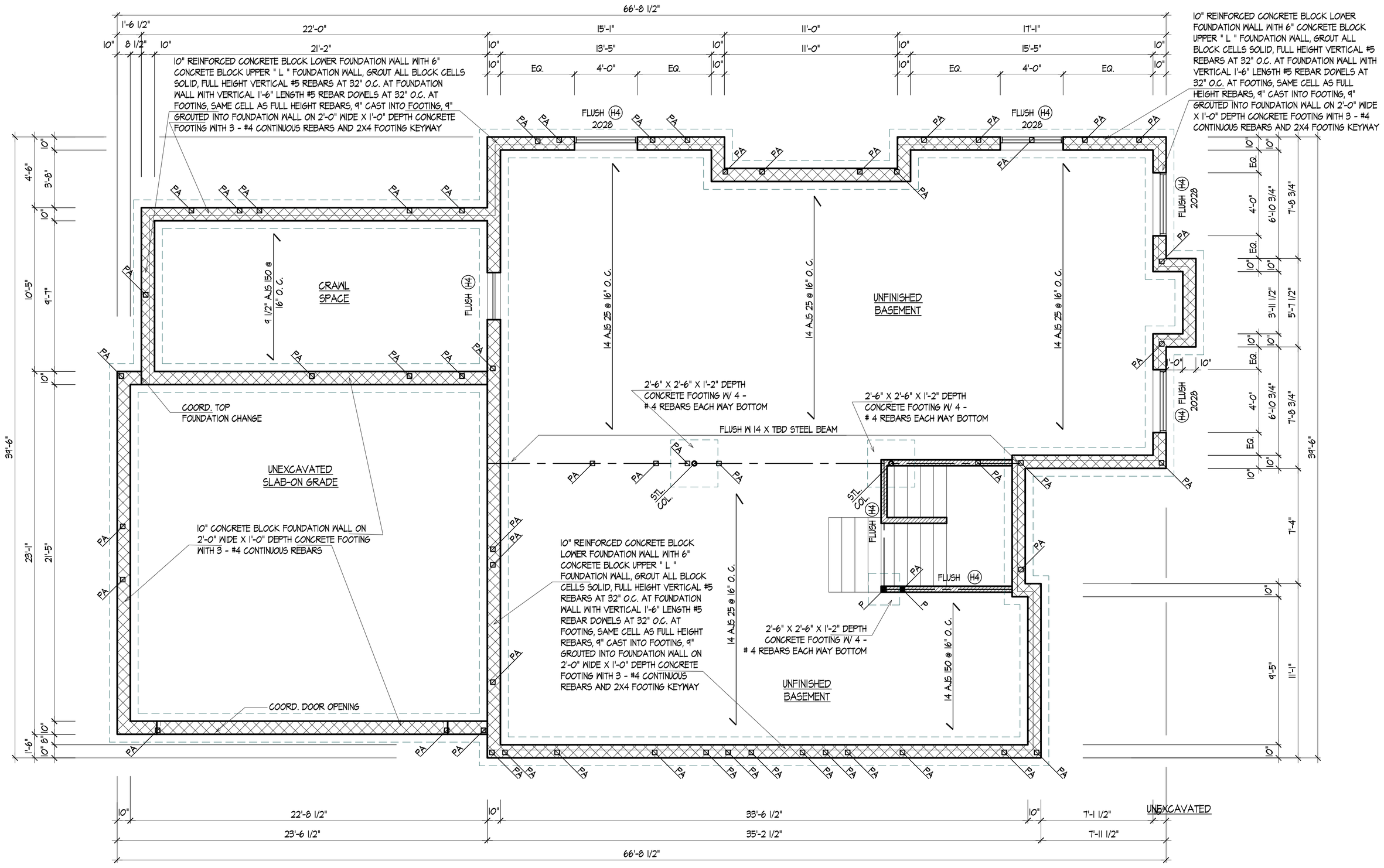

1 A-3 FOUNDATION / BASEMENT PLAN

SCALE: 1/4" = 1'-0"

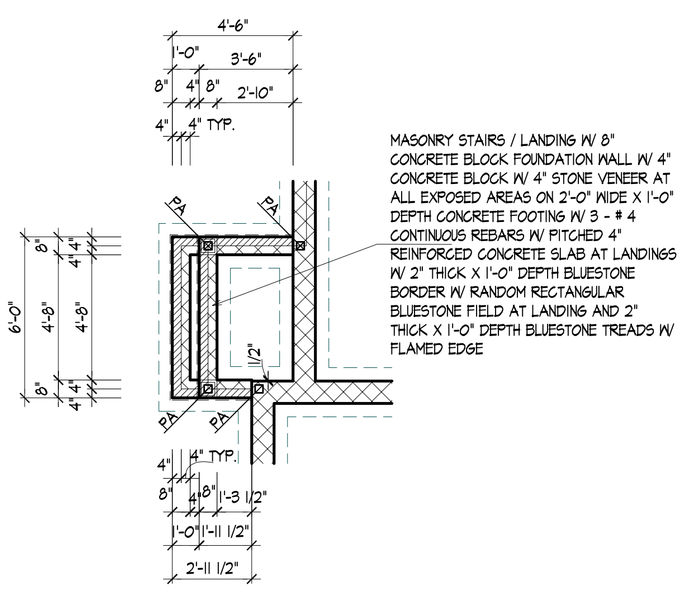

3 A-3 SIDE ENTRY STEPS FOUNDATION PLAN

SCALE: 1/4" = 1'-0"

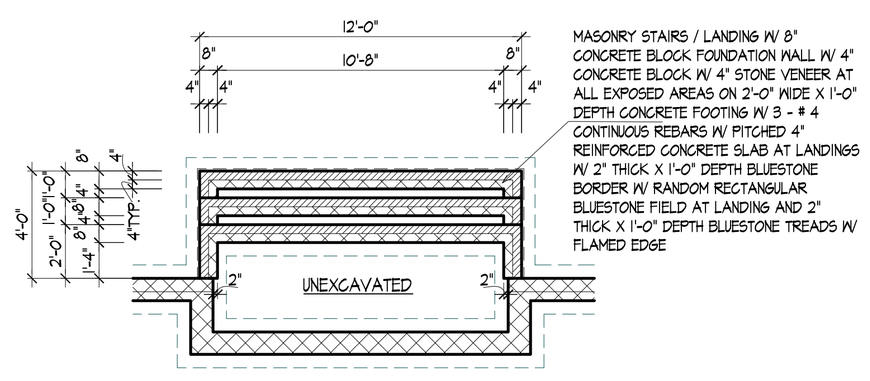

2 A-3 REAR STEPS FOUNDATION PLAN

SCALE: 1/4" = 1'-0"

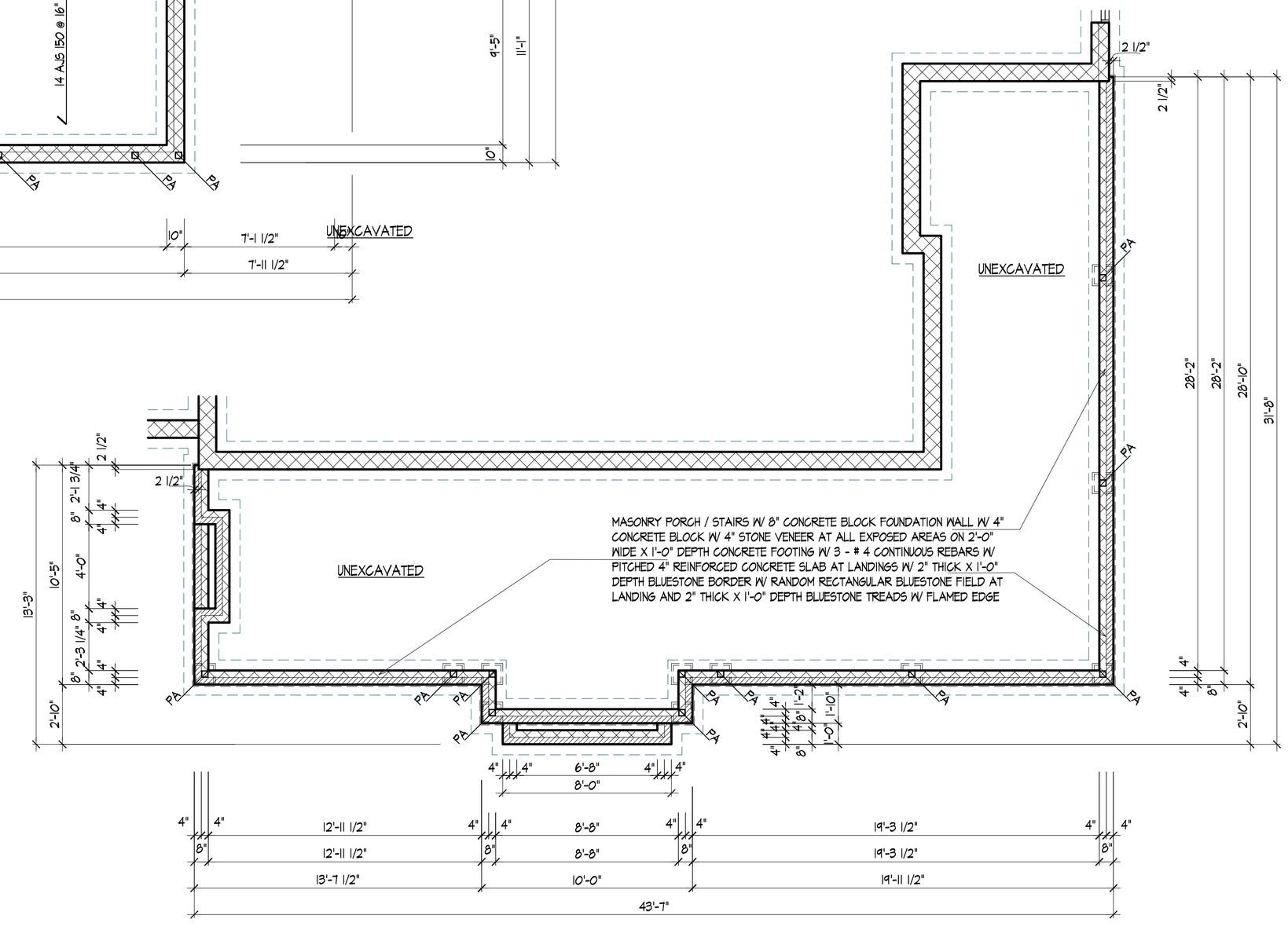

4 A-3 FRONT PORCH FOUNDATION PLAN

SCALE: 1/4" = 1'-0"

HEADER SCHEDULE

- (H1) 1 - 3 1/2 X 9 1/2 / OR / 2- 1 3/4 X 9 1/2 LVL'S / OR / APB HEADER W/ TYPICAL POSTING
- (H2) 2 - 2 X 10 HEADER W/ TYPICAL POSTING
- (H3) 1- 3 1/2 x 11 7/8 / OR / 2 - 1 3/4 X 11 7/8 LVL'S / OR / APB HEADER W/ TYPICAL POSTING
- (H4) 1- 3 1/2 x 14 / OR / 2 - 1 3/4 X 14 LVL'S / OR / APB HEADER W/ TYPICAL POSTING
- (H5) 1- 3 1/2 x 16 / OR / 2 - 1 3/4 X 16 LVL'S / OR / APB HEADER W/ TYPICAL POSTING
- (H6) 2 - 2 X 6 HEADER W/ TYPICAL POSTING
- (H7) 2 - 2 X 8 HEADER W/ TYPICAL POSTING
- (H8) 1- 3 1/2 x 7 1/2 / OR / 2 - 1 3/4 X 7 1/2 LVL'S / OR / APB HEADER W/ TYPICAL POSTING

TYPICAL HEADER POSTING -
1 - 2 X 4 POST UNDER AND 1 - 2 X 4 POST LINER EACH SIDE UP TO 6 FT. SPAN
-OR-
2 - 2 X 4 POST UNDER AND 1 - 2 X 4 POST LINER FOR SPANS OVER 6 FT. TO FULL BEARING BELOW.

P - POST - TYPICAL POSTING AS NOTED ABOVE OR QUANITY TO ACHIEVE FULL WIDTH OF BEAM ABOVE OR AS SPECIFIED ON DRAWING. INSTALL FROM BEAM ABOVE TO BEAM BEARING POINT OR FOUNDATION BELOW FOR FULL TRANSFER OF LOADS ABOVE TO FOUNDATION / FOOTING

EQ. PA - POST ABOVE - TYPICAL POSTING AS NOTED ABOVE OR QUANITY TO ACHIEVE FULL WIDTH OF BEAM ABOVE OR AS SPECIFIED ON DRAWING. INSTALL FROM BEAM ABOVE TO BEAM BEARING POINT OR FOUNDATION BELOW FOR FULL TRANSFER OF LOAD'S ABOVE TO FOUNDATION / FOOTING

DATE	ISSUE
4-24-2020	ISSUED FOR BID
3-20-2020	ISSUED FOR OWNER REVIEW
2-5-2020	ISSUED FOR ZONING APPROVAL
8-29-2019	ISSUED FOR OWNER REVIEW

RDS ARCHITECTS
ROGER SCHLICHT ARCHITECT
56 Walthery Avenue, Ridgewood, New Jersey 07450
2 0 1 . 4 4 7 . 1 9 6 2

Roger D. Schlicht
NJ. Licence No. 09576

LEHMAN RESIDENCE

166 Sussex Road

Township of Washington, N.J.

DATE: 8-29-2019
SCALE: AS NOTED

FOUNDATION / BASEMENT PLAN
REAR STEPS / SIDE STEPS / FRONT PORCH FOUNDATION PLANS

A-3