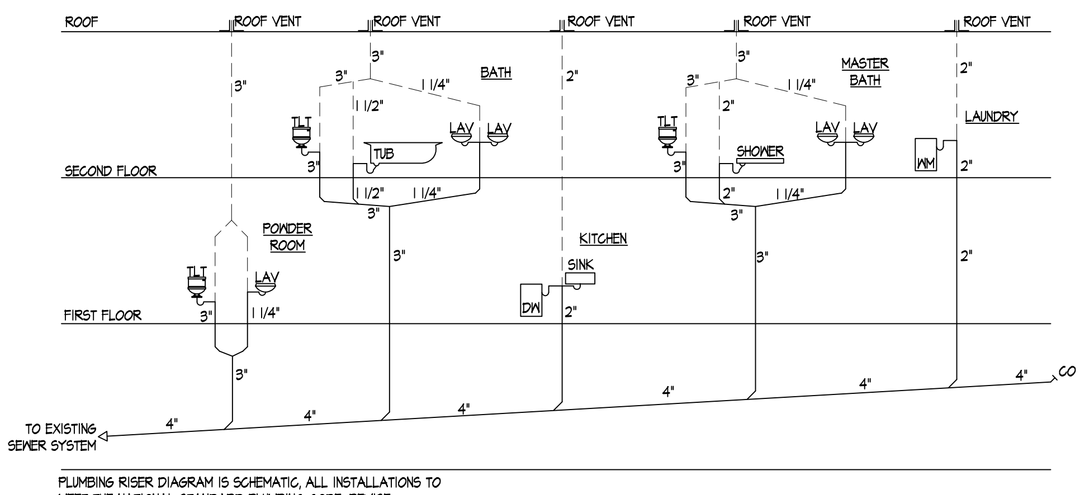

PLUMBING RISER DIAGRAM IS SCHEMATIC, ALL INSTALLATIONS TO MEET THE NATIONAL STANDARD PLUMBING CODE. REVISE SCHEMATIC DIAGRAM AS REQUIRED TO MEET ALL CODES AND LAWS.

1 A-6 PLUMBING RISER DIAGRAM

SCALE: 1/4" = 1'-0"

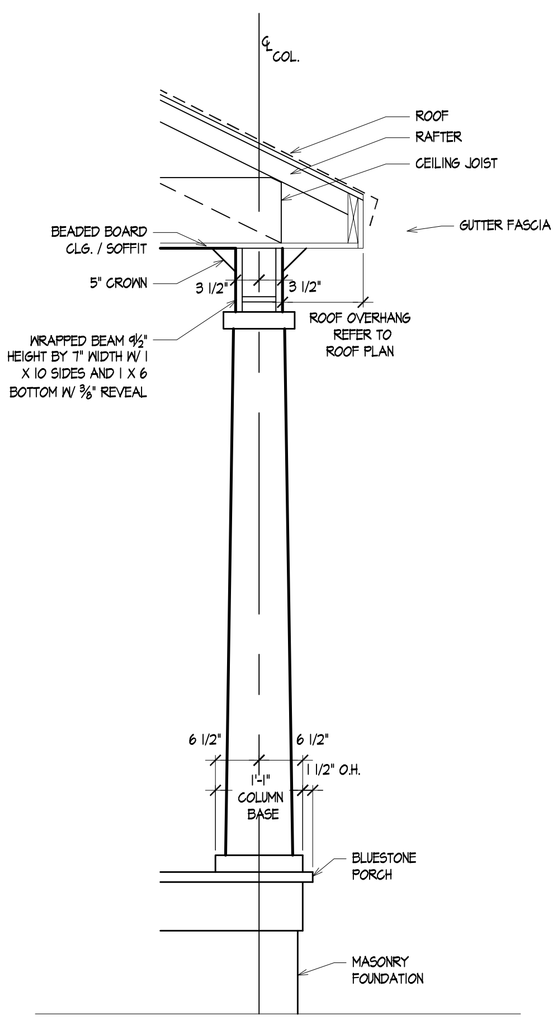

2 A-6 PORCH COLUMN / BEAM DETAIL

SCALE: NTS

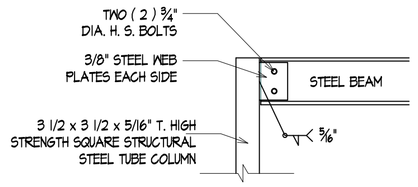

3 A-6 ALTERNATE STEEL COLUMN TOP

SCALE: NTS

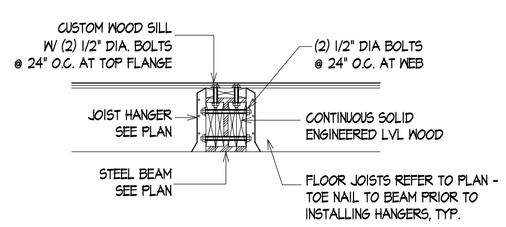

4 A-6 TYPICAL FLUSH STEEL BEAM DETAIL

SCALE: NTS

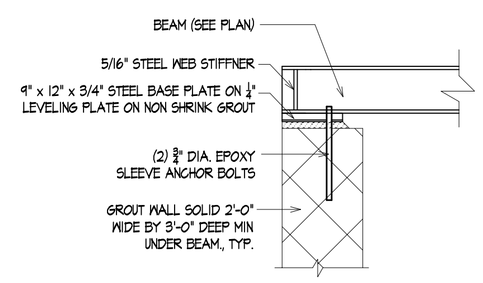

5 A-6 TYPICAL STEEL BEAM / COLUMN AT FOUNDATION WALL DETAIL

SCALE: NTS

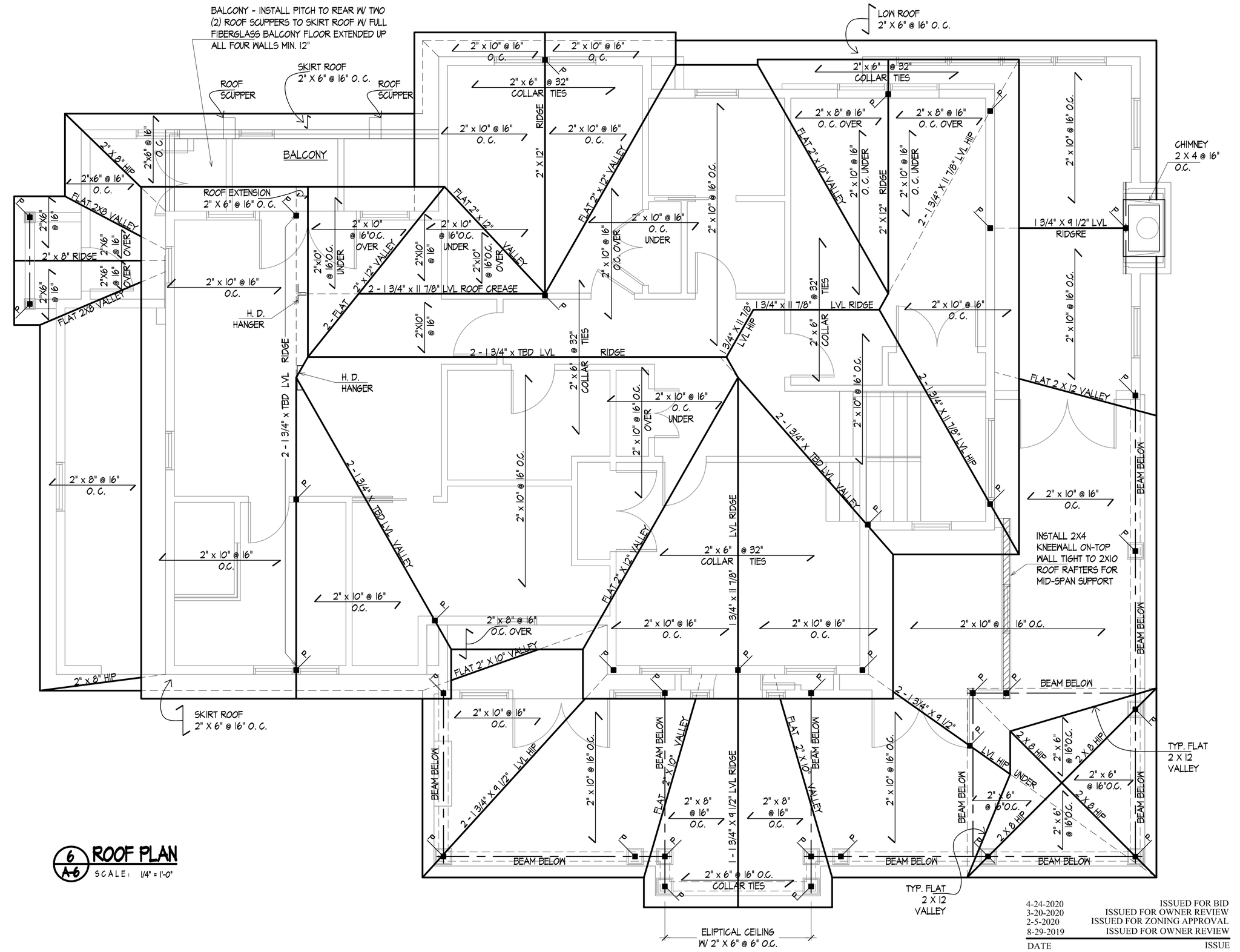

6 A-6 ROOF PLAN

SCALE: 1/4" = 1'-0"

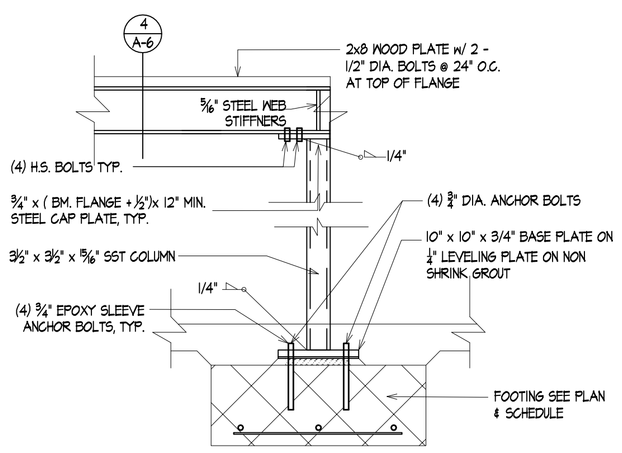

7 A-6 TYPICAL STEEL BEAM / COLUMN AT FOOTING DETAIL

SCALE: NTS

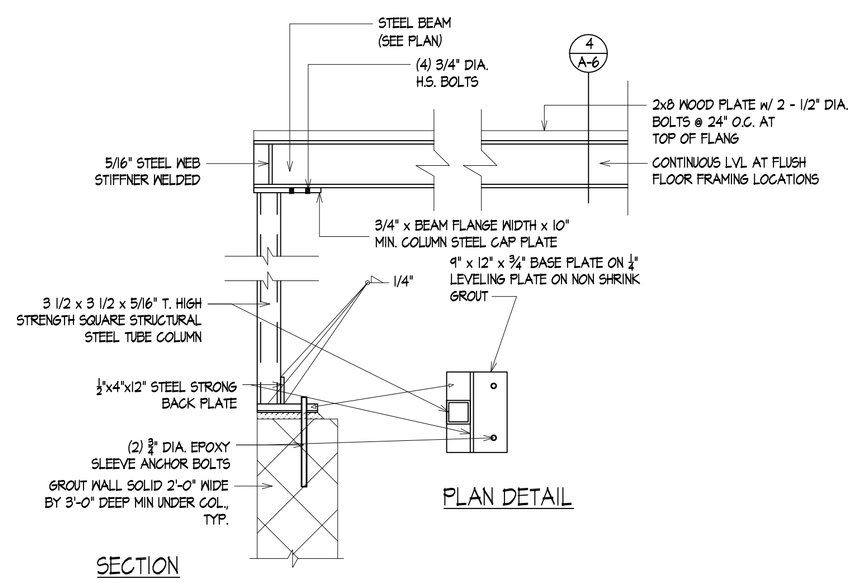

8 A-6 TYPICAL STEEL BEAM AT FOUNDATION DETAIL

SCALE: NTS

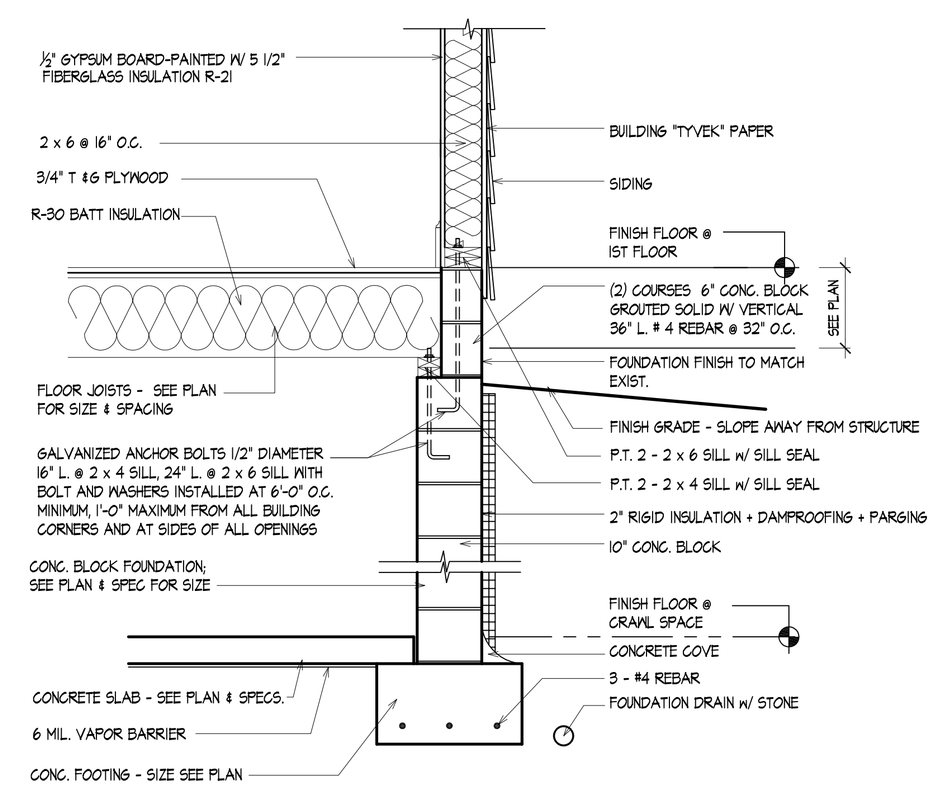

9 A-6 CRAWL SPACE WALL SECTION

SCALE: 3/4" = 1'-0"

DATE	ISSUE
4-24-2020	ISSUED FOR BID
3-20-2020	ISSUED FOR OWNER REVIEW
2-5-2020	ISSUED FOR ZONING APPROVAL
8-29-2019	ISSUED FOR OWNER REVIEW

R D S ARCHITECTS
ROGER SCHLICHT ARCHITECT
56 Walthery Avenue, Ridgewood, New Jersey 07450
2 0 1 . 4 4 7 . 1 9 6 2

Roger D. Schlicht
NJ. Licence No. 09576

LEHMAN RESIDENCE

166 Sussex Road

Township of Washington, N.J.

DATE:	8-29-2019
SCALE:	AS NOTED

PLUMBING RISER DIAGRAM
STEEL DETAILS
ROOF PLAN

A-6